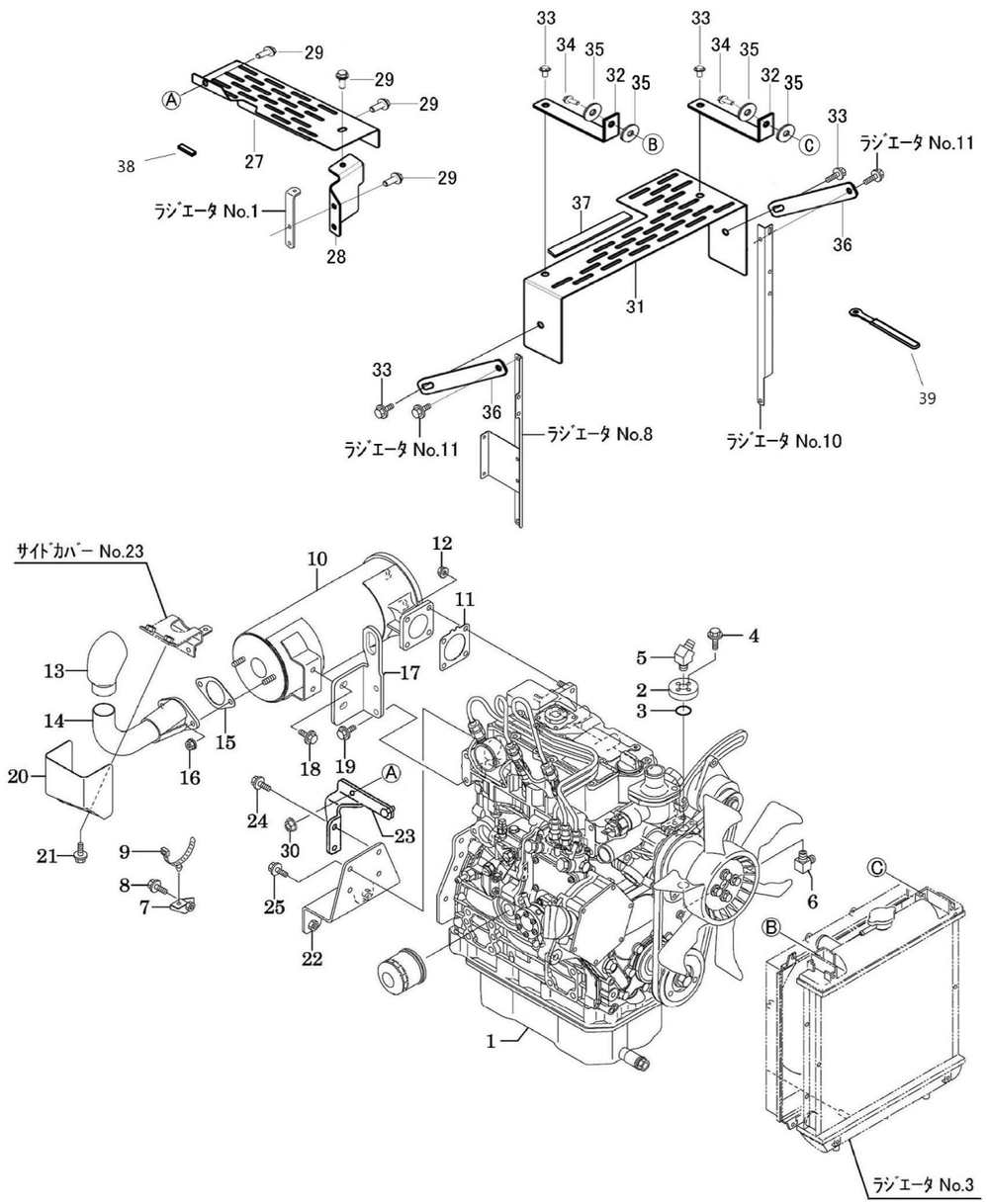

WADO CO., LTD
ENGINE & MUFFLER SX2211E

No.	Parts No.	Name	Quantity	Note
1	01001-B53-001	ENGINE, 3TNV76-XSR1	1	
2	67902-A63-000	FLANGE, HYDRAULIC	1	
3	98310-02024	RING O, P20	1	
4	93100-0602517	BOLT, FLANGE 6×25	4	
5	51902-B51-001	JOINT, ELBOW PT3/8×PF1/2 45°	1	
6	51901-A26-000	JOINT, ELBOW PF3/8×PF1/4	1	
7	02800-B85-001	STAY COMP, ENGINE HARNESS	1	
8	93100-0801617	BOLT, FLANGE 8×16	1	
9	91314-11765	STRAP, CABLE 1-1765	1	
10	129065-13500	SILENCER	1	
11	129004-13200	GASKET, SILENCER	1	
12	94002-08410	NUT, FLANGE 8	4	
13	105198-13610	CAP COMP, MUFFLER	1	
14	02500-B85-000	PIPE COMP, EX	1	
15	129107-13550	GASKET, MUFFLER CAP	1	
16	94002-08410	NUT, FLANGE 8	2	
17	02903-B53-801	STAY, MUFFLER	1	
18	93100-0802017	BOLT, FLANGE 8×20	2	
19	93100-0801617	BOLT, FLANGE 8×16	2	
20	02600-B85-000	COVER COMP, MUFFLER	1	
21	93100-0801217	BOLT, FLANGE 8×12	2	
22	02400-B85-000	BRACKET COMP, BELT STOPPER	1	
23	02700-B86-000	BRACKET COMP, DAMPER	1	
24	93100-0802017	BOLT, FLANGE 8×20	2	
25	93100-0801617	BOLT, FLANGE 8×16	2	
27	05901-B86-000	COVER, MANIFOLD	1	
28	05200-B86-000	STAY COMP, MANIFOLD	1	
29	93100-0802017	BOLT, FLANGE 8×20	5	
30	94002-08410	NUT, FLANGE 8	1	
31	08500-B86-000	COVER COMP, FAN	1	
32	08902-B54-000	STAY A, FAN COVER	2	
33	93100-0801617	BOLT, FLANGE 8×16	4	
34	93100-0602517	BOLT, FLANGE 6×25	2	
35	94101-06015	WASHER, PLAIN 6	2	
36	08903-B54-000	STAY B, FAN COVER	2	
37	02904-A91-000	RUBBER, 8×173	1	
38	05902-B86-000	RUBBER, 8×30	3	
39	91331-080451	CLAMP, CORD 8x45	1	

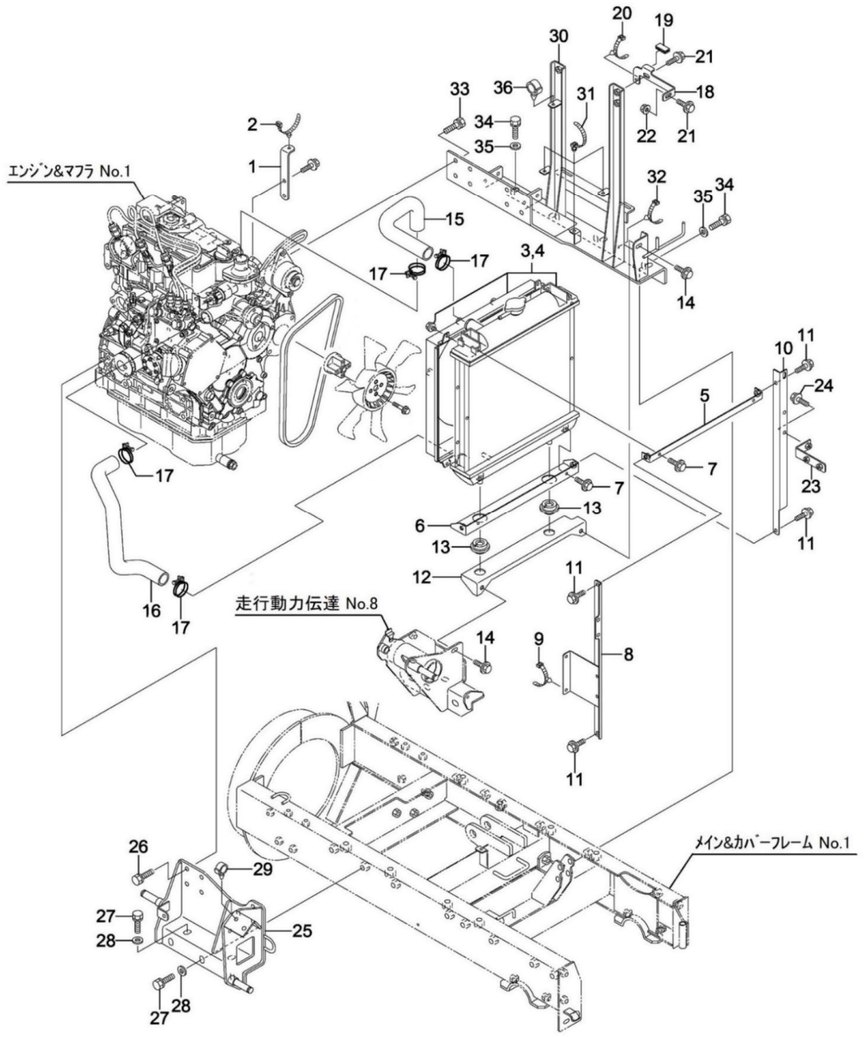

WADO CO., LTD
RADIATOR SX2211E

No.	Parts No.	Name	Quantity	Note
1	02906-B53-000	STAY, FUEL HOSE	1	
2	91314-119P7	STRAP, CABLE 1-19P7	1	
3	119802-44500	RADIATOR COMP	1	
5	03100-B54-000	UPPER FRAME COMP, RADIATOR	1	
6	03200-B54-001	LOWER FRAME COMP, RADIATOR	1	
7	93100-0601617	BOLT, FLANGE 6×16	4	
8	03700-B85-001	FRAME L COMP, RADIATOR	1	
9	91314-11W02	STRAP, CABLE 1-1W02	2	
10	03902-B85-000	FRAME R, RADIATOR	1	
11	93100-0802017	BOLT, FLANGE 8×20	4	
12	03100-B53-001	BASE COMP, RADIATOR	1	
13	119255-44660	RUBBER, ANTIVIBRATION (RADIATOR)	2	
14	93100-0802017	BOLT, FLANGE 8×20	2	
15	119960-49010	CW-T, A	1	
16	119960-49020	CW-T, B	1	
17	23010-038000	BAND, HOSE 38	4	
18	03904-B85-000	STAY B, RADIATOR	1	
19	48903-B53-000	RUBBER, 12×25	1	
20	91315-C1J77	CLIP, CABLE C-1J77	1	
21	93100-0801617	BOLT, FLANGE 8×16	2	
22	94002-08410	NUT, FLANGE 8	1	
23	03200-B85-000	STAY, SUB TANK	1	
24	93100-0801617	BOLT, FLANGE 8×16	1	
25	02100-B53-002	BASE L COMP, ENGINE	1	
26	93000-1002517	BOLT, SPECIAL 10×25	7	
27	93000-1203017	BOLT, SPECIAL 12×30	5	
28	94101-12010	WASHER, PLAIN 12	5	
29	91315-C1U68	CLIP, CABLE C-1U68	1	
30	02200-B85-000	BASE R COMP, ENGINE	1	
31	91314-11765	STRAP, CABLE 1-1765	3	
32	91314-119P7	STRAP, CABLE 1-19P7	1	
33	93000-1002517	BOLT, SPECIAL 10×25	7	
34	93000-1203017	BOLT, SPECIAL 12×30	8	
35	94101-12010	WASHER, PLAIN 12	8	
36	91315-C1E50	CLIP, CABLE C-1E50	1	

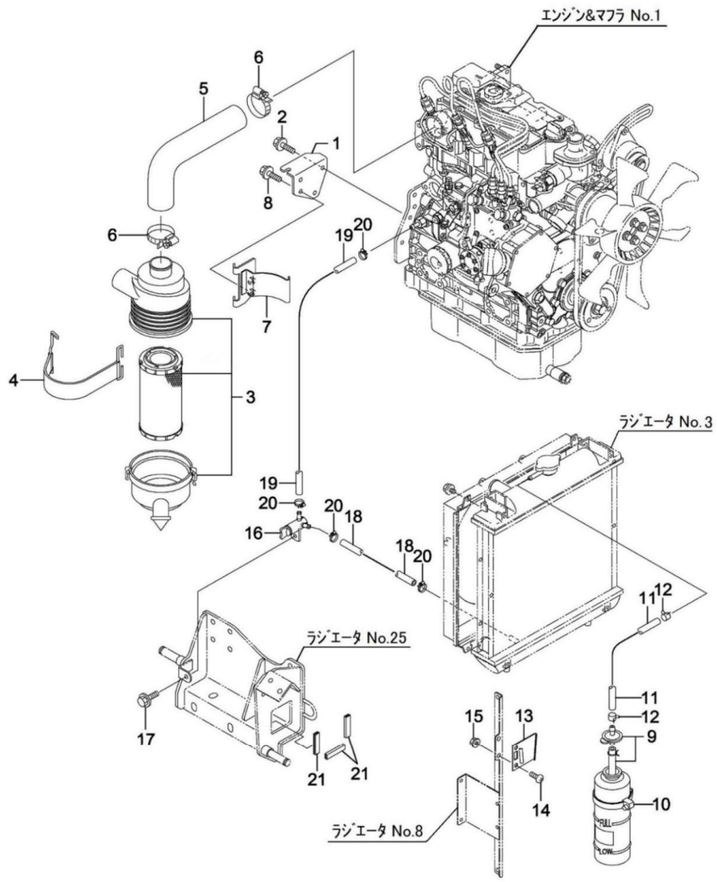

WADO CO., LTD
AIR CLEANER & SUB TANK SX2211E

No.	Parts No.	Name	Quantity	Note
1	02902-B53-000	STAY, AIR CLEANER	1	
2	93100-0801617	BOLT, FLANGE 8×16	2	
3	119624-12510	CLEANER COMP, AIR	1	
4	119865-12600	BAND, AIR CLEANER	1	
5	119527-12030	PIPE, INTAKE	1	
6	23000-060000	CLIP 60, HOSE	2	
7	02300-B53-001	BRACKET COMP, AIR	1	
8	93100-0801617	BOLT, FLANGE 8×16	2	
9	124450-44510	TANK COMP, SUB	1	
10	124450-44550	BAND, SUB TANK	1	
11	124756-77700	FO-T(L=240	1	
12	121250-44590	CLIP, HOSE	2	
13	121256-44600	BRACKET, SUB TANK	1	
14	93400-0801214	BOLT, SPECIAL 8×12	2	
15	94002-08410	NUT, FLANGE 8	2	
16	129150-49100	COCK COMP, THREE WAY	1	
17	93100-0802017	BOLT, FLANGE 8×20	1	
18	91543-0750751	HOSE, BLADE 7.5×750	1	
19	91543-0750221	HOSE, BLADE 7.5×220	1	
20	91324-013	BAND, HOSE 13	4	
21	02903-B54-001	RUBBER, 12.5×53	3	

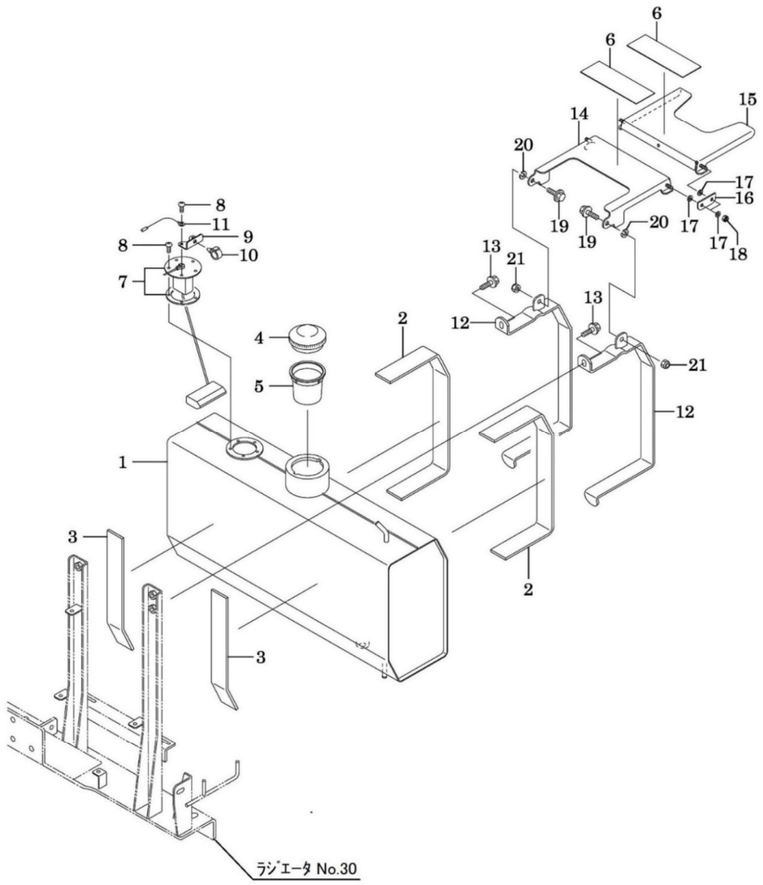

WADO CO., LTD
FUEL TANK SX2211E

No.	Parts No.	Name	Quantity	Note
1	04100-B78-050	TANK COMP, FUEL 25	1	
2	04901-B85-000	RUBBER, 40×580×5	2	
3	04902-B85-000	RUBBER, 40×250×5	2	
4	02010-B50-000	CAP, FUEL	1	
5	02020-B50-000	FILTER	1	
6	03906-B63-000	TAPE, AK 150×50	2	
7	04300-B78-000	SENSOR, FUEL	1	
8	93500-0501214	SCREW, PAN 5×12	5	
9	04905-B78-001	STAY, GAUGE HARNESS	1	
10	91315-C4397	CLIP, CABLE C-4397	1	
11	87300-B18-000	CORD, EARTH	1	
12	03600-B85-030	BAND COMP, TANK	2	
13	93100-0802517	BOLT, FLANGE 8×25	2	
14	03300-B78-001	GUIDE A COMP, TANK	1	
15	03400-B78-002	GUIDE B COMP, TANK	1	
16	03905-B63-001	PLATE, LINK	2	
17	94101-06010	WASHER, PLAIN 6	8	
18	91233-064010	NUT, SPECIAL 6	4	
19	93100-0802017	BOLT, FLANGE 8×20	2	
20	94111-08012	WASHER, SPG 8	2	
21	91234-084110	NUT, TOUGH LOCK 8	2	

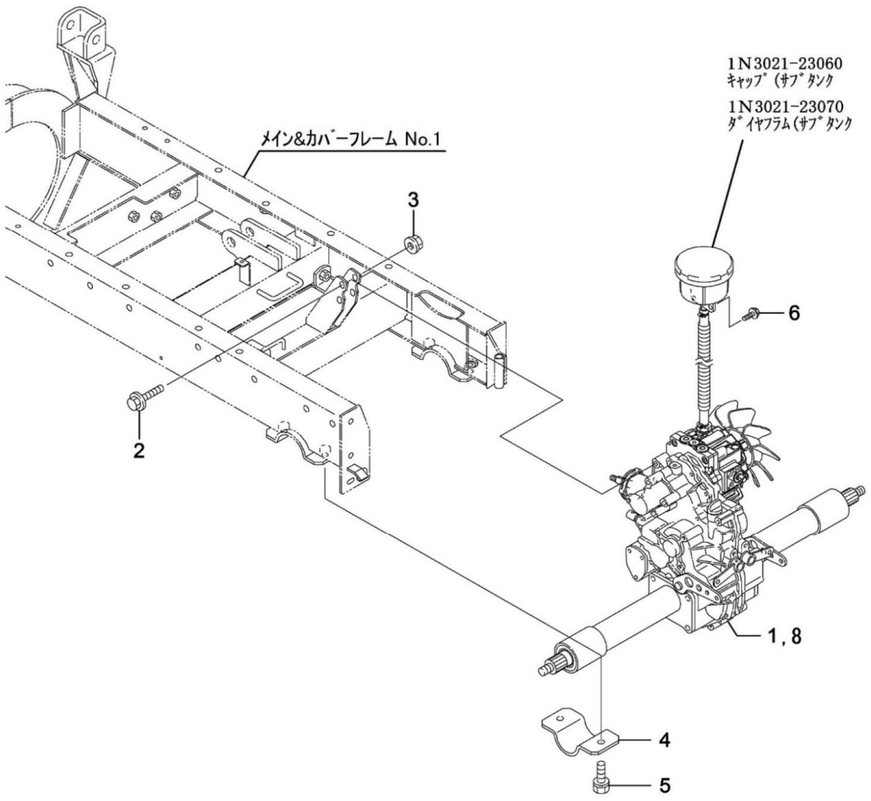

WADO CO., LTD
TRANSMISSION SX2211E

No.	Parts No.	Name	Quantity	Note
1	10001-B53-002	MISSION, SB-30H	1	
2	93300-1005017	BOLT, FLANGE 10×1.25×50	2	
3	94006-10410	NUT, FLANGE 10×1.25	2	
4	41903-A91-000	HOLDER, SHAFT	2	
5	93000-1203517	BOLT, SPECIAL 12×35	4	
6	93100-0802017	BOLT, FLANGE 8×20	2	

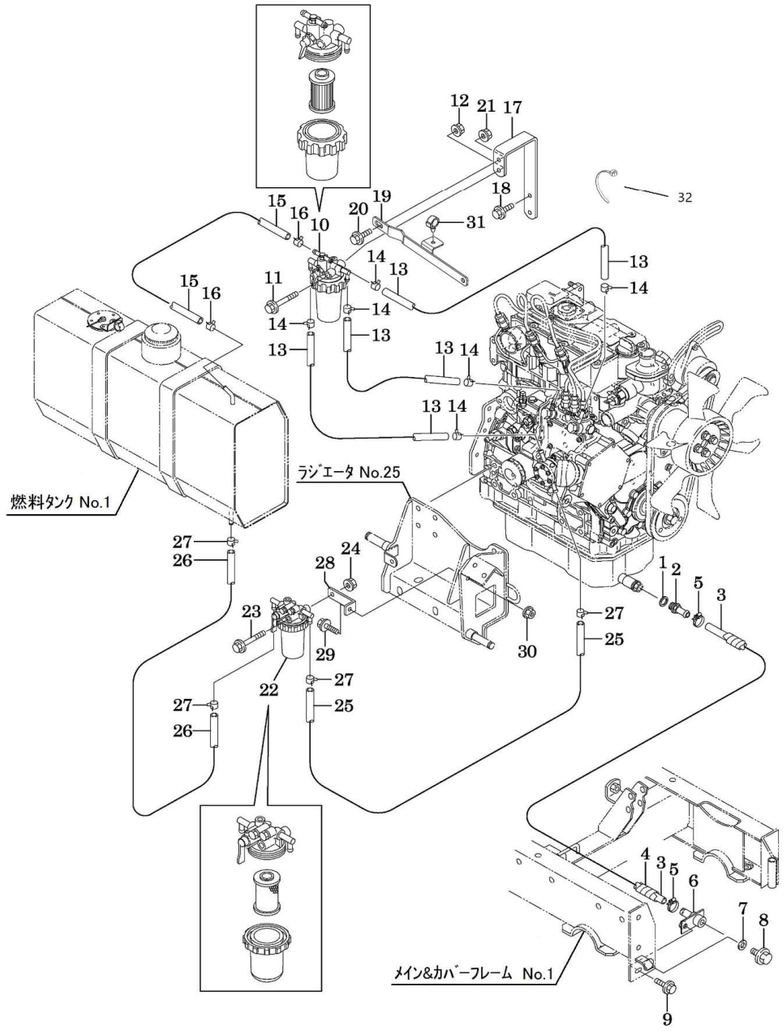

WADO CO., LTD
FUEL HOSE SX2211E

No.	Parts No.	Name	Quantity	Note
1	22190-160002	WASHER, SEAL 16	1	
2	129459-39150	DRAIN, OIL EXTENSION	1	
3	91542-1505601	HOSE, 15×560	1	
4	91382-1905101	CORRUGATE 19×510	1	
5	91323-019	CLAMP, HOSE 19	2	
6	02700-B54-000	JOINT COMP, DRAIN	1	
7	91691-1222205	PACKING, 12.5×22×2.0	1	
8	93300-1201617	BOLT, FLANGE 12×1.25×16	1	
9	93100-0802017	BOLT, FLANGE 8×20	1	
10	119255-55620	FILTER COMP, FO	1	
11	93100-0807017	BOLT, FLANGE 8×70	1	
12	94002-08410	NUT, FLANGE 8	1	
13	91543-0750271	HOSE, BLADE 7.5×270	3	
14	91324-013	BAND, HOSE 13	6	
15	91543-0750801	HOSE, BLADE 7.5×800	1	
16	91324-013	BAND, HOSE 13	2	
17	02904-B53-000	STAY, FILTER	1	
18	93100-0801617	BOLT, FLANGE 8×16	2	
19	03800-B86-000	STAY L COMP, RADIATOR	1	～No.210999
	03901-B86-800	STAY L, RADIATOR	1	No.211000～
20	93100-0802017	BOLT, FLANGE 8×20	1	
21	94002-08410	NUT, FLANGE 8	1	
22	129335-55700	SEPARATOR COMP, OIL	1	
23	93100-0806517	BOLT, FLANGE 8×65	1	
24	94002-08410	NUT, FLANGE 8	1	
25	91543-0750271	HOSE, BLADE 7.5×270	1	
26	91543-0751051	HOSE, BLADE 7.5×1050	1	
27	91324-013	BAND, HOSE 13	4	
28	02905-B85-000	STAY, SEPARATOR	1	
29	93100-0802017	BOLT, FLANGE 8×20	1	
30	94002-08410	NUT, FLANGE 8	1	
31	91315-A3455	CLIP, CABLE A-3455	1	～No.210999
32	91311-140	BAND, REPEAT RF140	1	

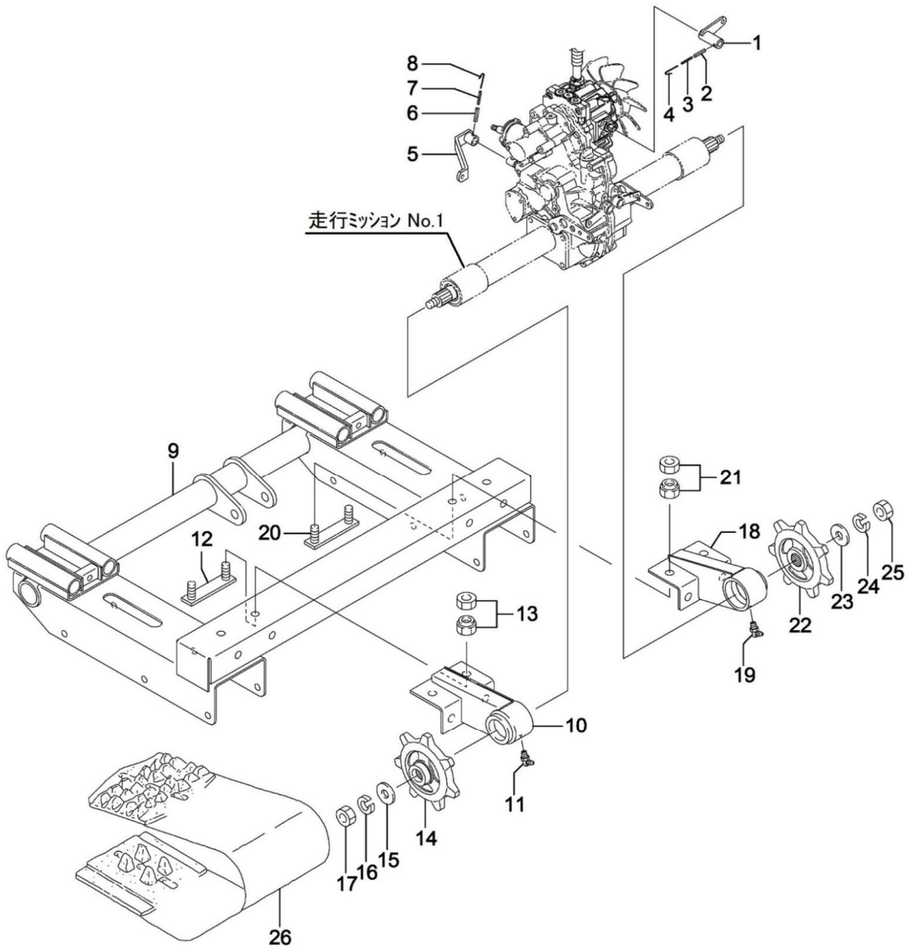

WADO CO., LTD
CRAWLER & CRAWLER FRAME SX2211E

No.	Parts No.	Name	Quantity	Note
1	75300-B54-002	ARM, CHANGE	1	
2	94319-50025	PIN, SPG 5×25	1	
3	94319-30025	PIN, SPG 3×25	1	
4	75913-B18-000	WIRE, SPECIAL 1.2×100	1	
5	75400-B16-000	ARM COMP, SUB CHANGE	1	
6	94319-60025	PIN, SPG 6×25	1	
7	94319-35025	PIN, SPG 3.5×25	1	
8	75913-B18-000	WIRE, SPECIAL 1.2×100	1	
9	21100-B53-001	FRAME COMP, CRAWLER	1	
10	21200-B53-000	SUPPORT L COMP, AXLE	1	
11	96381-65000	NIPPLE, GREASE B-M6×1	1	
12	21500-B18-801	BOLT COMP, SET	2	
13	91235-16100	NUT, HARD LOCK 16	4	
14	26901-B54-001	SPROCKET, DRIVE	1	
15	91251-1640451	WASHER, RD 16×40×4.5	1	
16	94111-16012	WASHER, SPG 16	1	
17	94001-16411	NUT, 16	1	
18	21300-B53-000	SUPPORT R COMP, AXLE	1	
19	96381-65000	NIPPLE, GREASE B-M6×1	1	
20	21500-B18-801	BOLT COMP, SET	2	
21	91235-16100	NUT, HARD LOCK 16	4	
22	26901-B54-001	SPROCKET, DRIVE	1	
23	91251-1640451	WASHER, RD 16×40×4.5	1	
24	94111-16012	WASHER, SPG 16	1	
25	94001-16411	NUT, 16	1	
26	23901-B16-000	CRAWLER, 270×72×36	2	

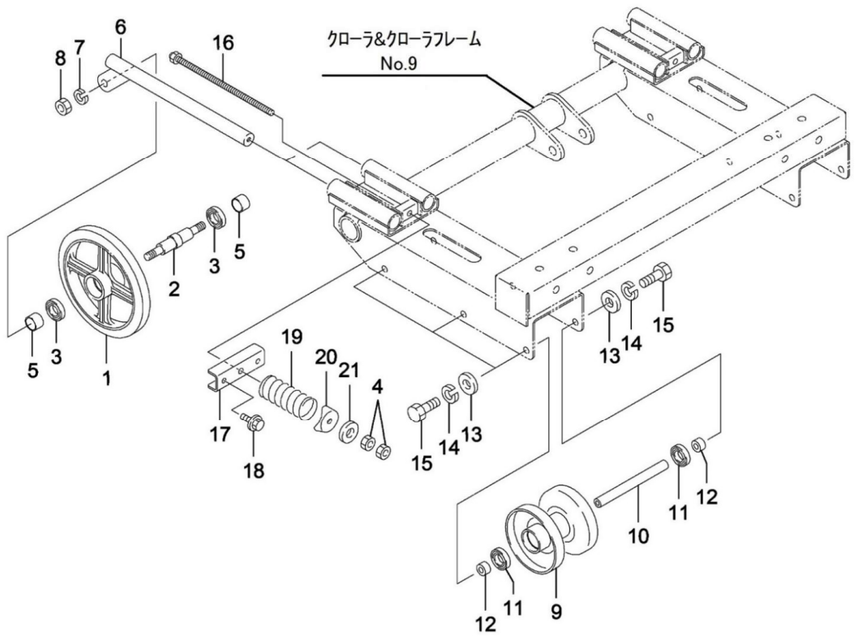

WADO CO., LTD
WHEEL SX2211E

No.	Parts No.	Name	Quantity	Note
1	26902-A09-801	WHEEL, FRONT	2	
2	24902-B72-000	SHAFT B, WHEEL	2	
3	96105-06005	BEARING, 6005UU	4	
4	94003-12412	NUT, SPECIAL 12	4	
5	64902-G19-002	COLLAR, 25×21.5	4	
6	21400-B53-801	BEAM COMP,TENSION	4	
7	94111-16012	WASHER, SPG 16	4	
8	94001-16411	NUT, 16	4	
9	26100-B51-001	WHEEL COMP, CRAWLER	6	
10	24901-B51-000	SHAFT, WHEEL	6	
11	96105-06005	BEARING, 6005UU	12	
12	24902-B51-000	COLLAR, WHEEL	12	
13	94101-14010	WASHER, PLAIN 14	12	
14	94111-14012	WASHER, SPG 14	12	
15	92000-1403517	BOLT, 14×35	12	
16	21500-B53-000	BOLT COMP, TENSION	2	
17	21901-B54-000	SUPPORT, TENSION BEAM	2	
18	93300-1002017	BOLT, FLANGE 10×1.25×20	4	
19	23901-B18-000	SPRING, BJ 50×100	2	
20	21902-B54-000	HOLDER, SPRING	2	
21	91251-1240451	WASHER, RD 12×40×4.5	2	

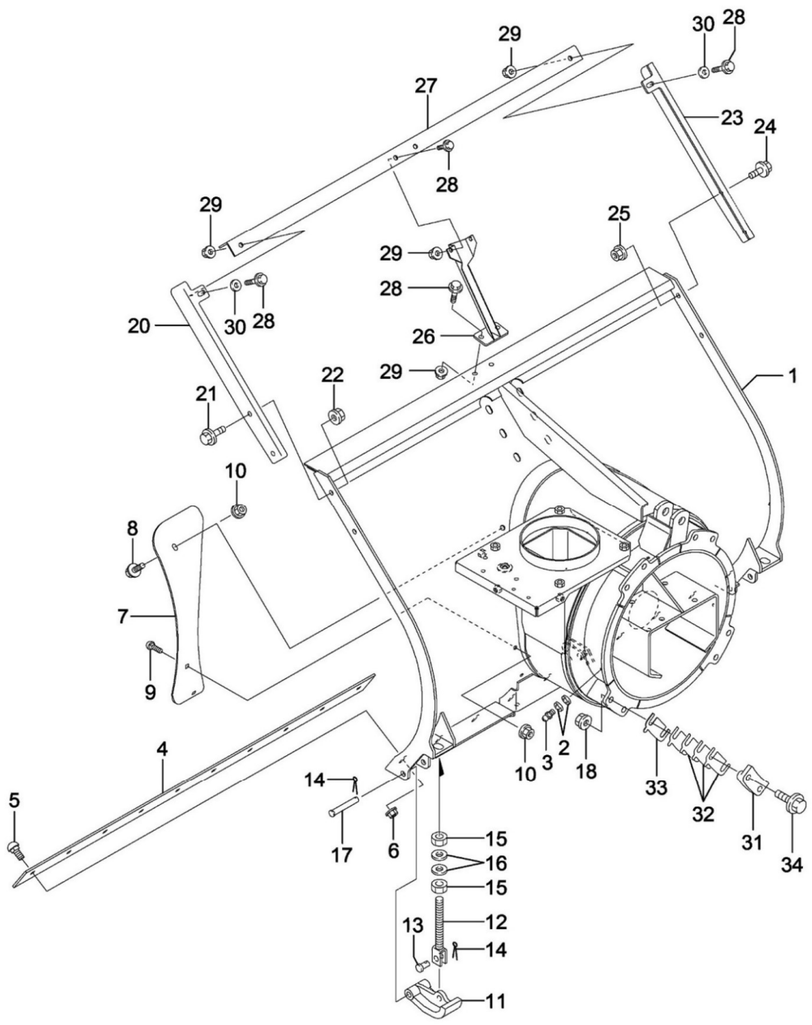

WADO CO., LTD
AUGER HOUSING SX2211E

No.	Parts No.	Name	Quantity	Note
1	31100-B85-007	HOUSING COMP, AUGER	1	
2	94101-06010	WASHER, PLAIN 6	6	
3	96381-20000	NIPPLE, GREASE A-MT6×1	3	
4	31901-B53-000	EDGE	1	
5	92600-0802014	BOLT, SPECIAL 8×20	10	
6	94002-08410	NUT, FLANGE 8	10	
7	31904-B53-000F1	PLATE	1	
8	93100-0802017	BOLT, FLANGE 8×20	1	
9	92600-0802014	BOLT, SPECIAL 8×20	2	
10	94002-08410	NUT, FLANGE 8	3	
11	31901-B03-000	SKID	2	
12	31300-A53-002	SUPPORT COMP, SKID	2	
13	91401-A53-000	PIN, 12×22	2	
14	94210-25200	PIN, SPLIT 2.5×20	4	
15	94001-16411	NUT, 16	4	
16	94101-16010	WASHER, PLAIN 16	4	
17	91402-A53-000	PIN, 12×70	2	
18	94006-12410	NUT, FLANGE 12×1.25	8	
20	31905-B53-000	PLATE L, SNOW CUTTING	1	
21	93300-1002517	BOLT, FLANGE 10×1.25×25	2	
22	94006-10410	NUT, FLANGE 10×1.25	2	
23	31906-B53-000	PLATE R, SNOW CUTTING	1	
24	93300-1002517	BOLT, FLANGE 10×1.25×25	2	
25	94006-10410	NUT, FLANGE 10×1.25	2	
26	31400-B54-002	SUPPORT COMP, CENTER	1	
27	31903-B53-001	BAR, SNOW CUTTING	1	
28	93100-0802017	BOLT, FLANGE 8×20	6	
29	94002-08410	NUT, FLANGE 8	6	
30	94101-08015	WASHER, PLAIN 8	2	
31	31400-B18-000	GUIDE COMP, ROLLING	4	
32	31902-B18-000	SHIM	16	
33	31903-B18-000	SHIM, 0.6	4	
34	93300-1204517	BOLT, FLANGE 12×1.25×45	8	

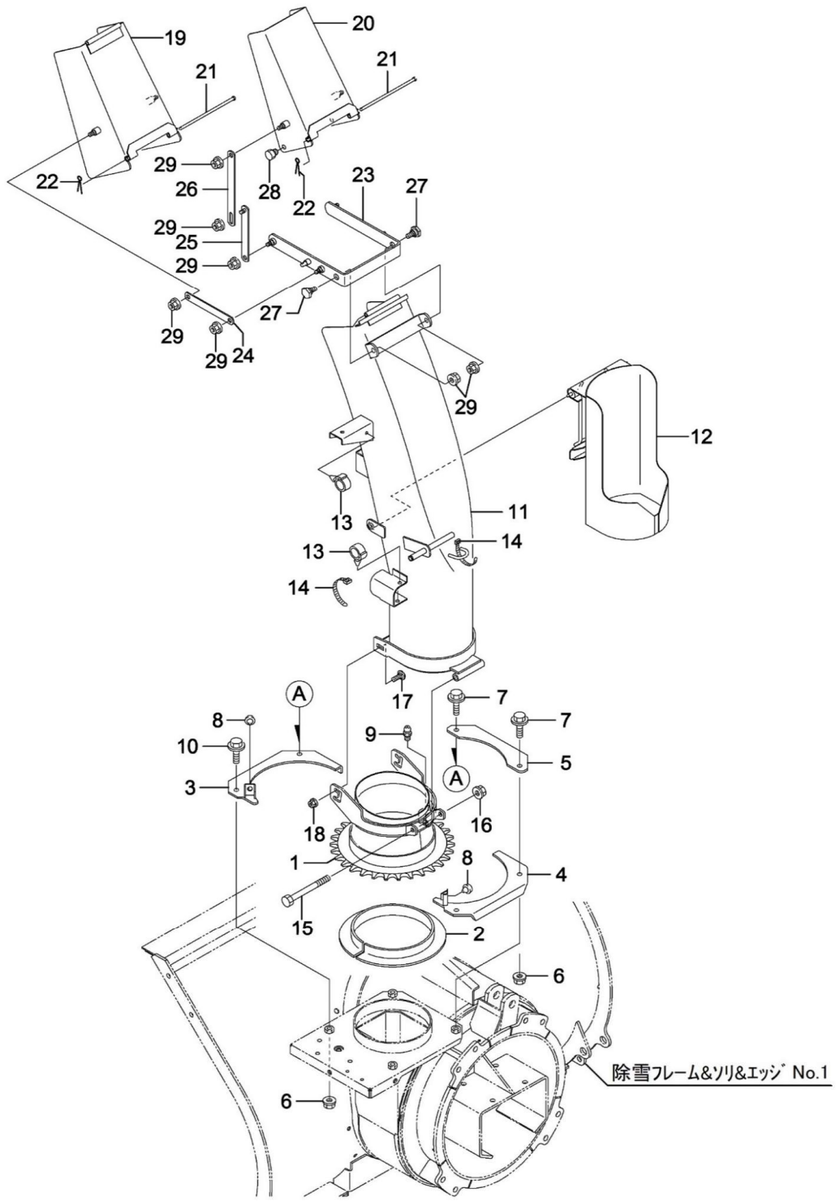

WADO CO., LTD
CHUTE SX2211E

No.	Parts No.	Name	Quantity	Note
1	33200-B72-007	BASE COMP, CHUTE	1	
2	33903-B72-001	RING	1	
3	33300-B72-003	STOPPER F COMP, CHUTE	1	
4	33400-B72-003	STOPPER R COMP, CHUTE	1	
5	33906-B72-004	GUIDE, STOPPER	1	
6	94006-10410	NUT, FLANGE 10×1.25	4	
7	93300-1003517	BOLT, FLANGE 10×1.25×35	2	
8	33907-B72-000	RUBBER	2	
9	96381-20000	NIPPLE, GREASE A-MT6×1	1	
10	93300-1003017	BOLT, FLANGE 10×1.25×30	2	
11	33100-B72-005	CHUTE COMP, 900	1	
12	33200-B50-003	COVER COMP, CARTRIDGE	1	
13	91315-C4397	CLIP, CABLE C-4397	2	
14	91311-140	BAND, REPEAT RF140	2	
15	92100-1010017	BOLT, 10×1.25×100	1	
16	94006-10410	NUT, FLANGE 10×1.25	1	
17	92600-0802014	BOLT, SPECIAL 8×20	2	
18	94002-08410	NUT, FLANGE 8	2	
19	33300-B53-600F2	DEFLECTOR A COMP, CHUTE	1	
20	33400-B53-600F2	DEFLECTOR B COMP, CHUTE	1	
21	91262-061650	PIN, CHUTE 6×165	2	
22	94210-20120	PIN, SPLIT 2×12	2	
23	33500-B72-001	ARM COMP, CHUTE	1	
24	33902-B53-000	ARM 129, LINK	2	
25	33600-B53-000	LINK A COMP, CHUTE	2	
26	33908-B72-002	LINK B, CHUTE	2	
27	33904-B53-000	BOLT, SPECIAL	2	
28	91361-18N0	PLUG, HOLE 18N0	2	
29	94002-08410	NUT, FLANGE 8	12	

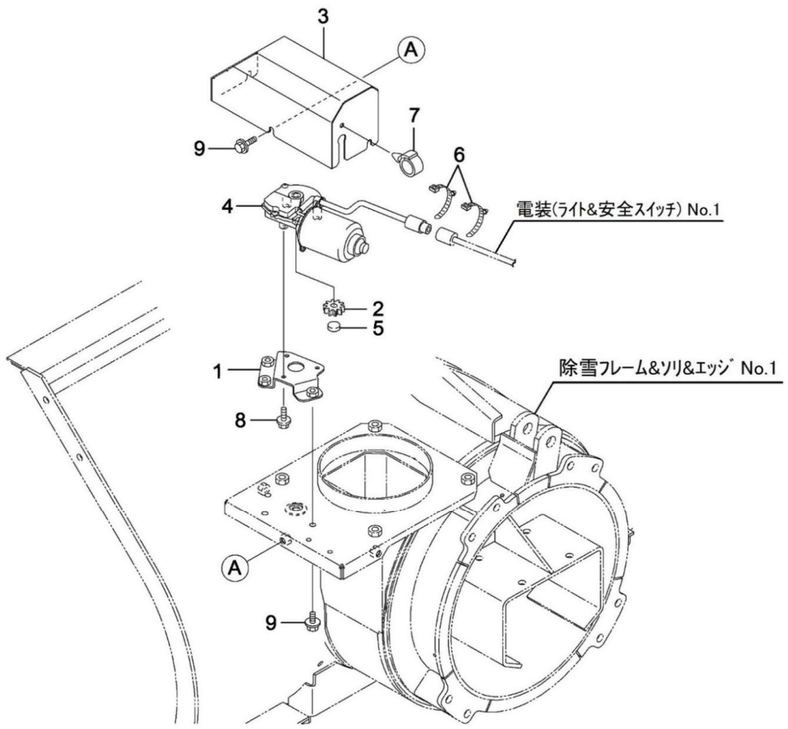

WADO CO., LTD
MOTOR (1) SX2211E

No.	Parts No.	Name	Quantity	Note
1	31300-B72-030	BRACKET, MOTOR	1	
2	33905-B72-031	GEAR, MOTOR	1	
3	38200-B72-103	COVER COMP, MOTOR	1	
4	81100-B82-001	MOTOR, 8157	1	
5	38902-B72-000	WHEEL, NYLON	1	
6	91314-119P7	STRAP, CABLE 1-19P7	2	
7	91315-C4397	CLIP, CABLE C-4397	1	
8	93100-0601617	BOLT, FLANGE 6×16	3	
9	93100-0801617	BOLT, FLANGE 8×16	6	

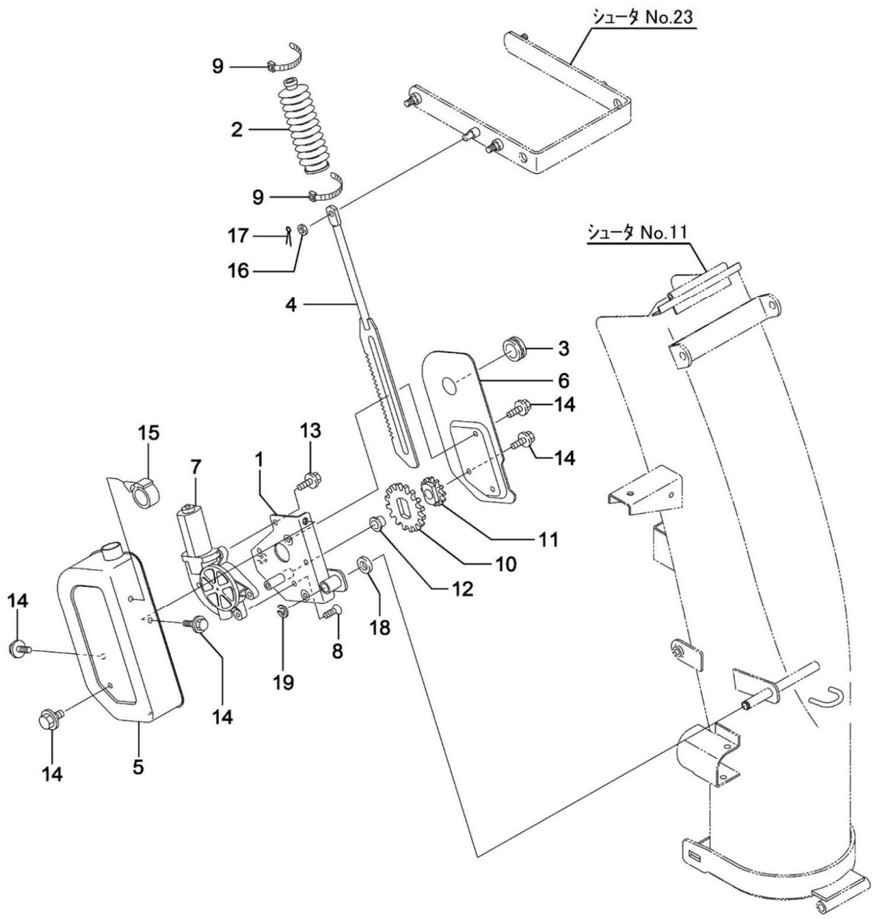

WADO CO., LTD
MOTOR (2) SX2211E

No.	Parts No.	Name	Quantity	Note
1	33700-B72-003	BRACKET A COMP, MOTOR	1	
2	33904-B08-000	BOOT, CHUTE	1	
3	91358-1202515	BUSH, RUBBER NG-79-N	1	
4	34200-B72-003	RACK COMP, CHUTE	1	
5	38100-B72-001	COVER COMP, MOTOR	1	
6	38905-B72-001	COVER, MOTOR	1	
7	81100-B53-002	MOTOR, JC578VA	1	
8	91217-0601674	SCREW, 6×16	1	
9	91316-2140	BAND, CABLE CV-140SW	2	
10	33902-B56-002	GEAR, M2×32	1	
11	33903-B56-003	GEAR, M2×18	1	
12	91644-121080	BUSH, 80F-1210	1	
13	93100-0601617	BOLT, FLANGE 6×16	3	
14	93100-0601217	BOLT, FLANGE 6×12	6	
15	91315-C4397	CLIP, CABLE C-4397	1	
16	94101-08010	WASHER, PLAIN 8	1	
17	94210-25150	PIN, SPLIT 2.5×15	1	
18	94101-12010	WASHER, PLAIN 12	1	
19	94511-09010	RING E, 9	1	

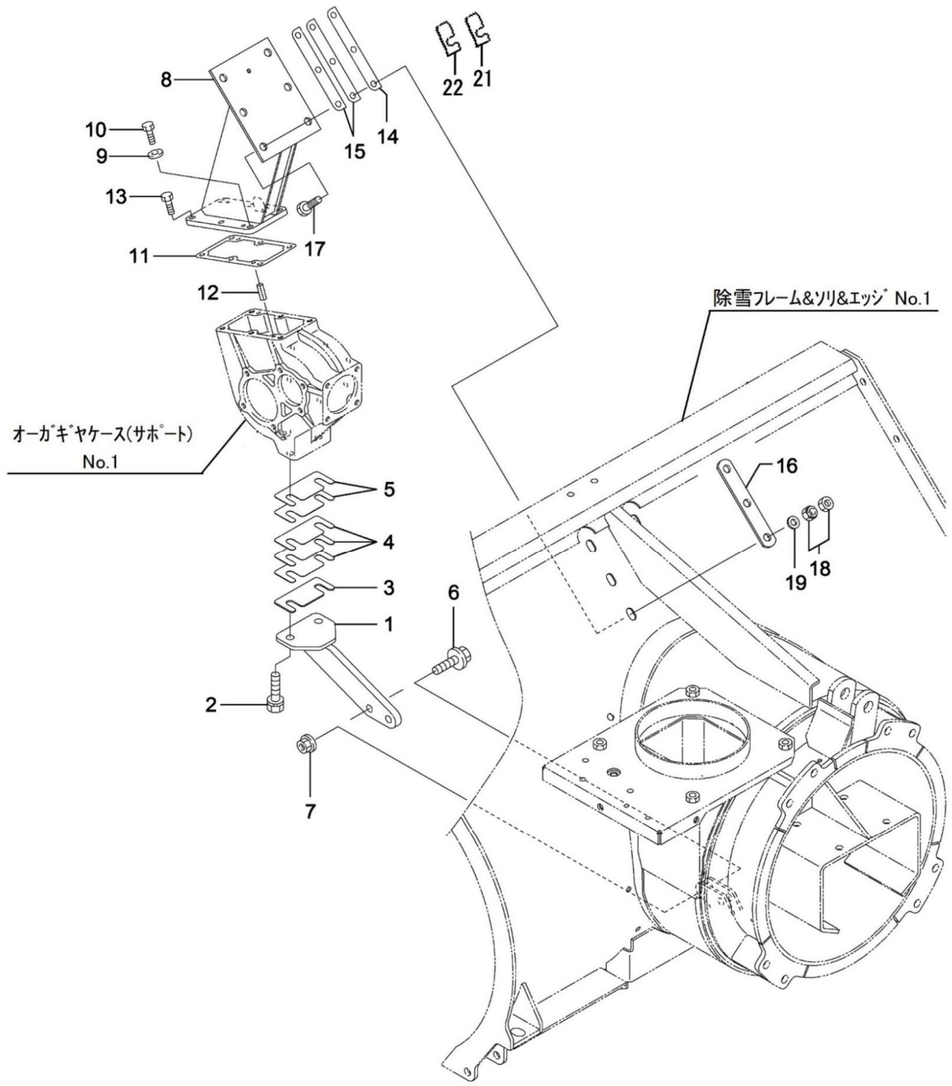

WADO CO., LTD
AUGER GEAR CASE (1) SX2211E

No.	Parts No.	Name	Quantity	Note
1	31200-B53-000	SUPPORT COMP, GEAR CASE	1	
2	91219-1030010	BOLT, SPECIAL 10×30	2	
3	31907-A71-001	LINER, GEAR CASE 2.0	1	
4	31908-A71-001	LINER, GEAR CASE 0.6	3	
5	31906-A83-000	SHIM, 0.3	2	
6	93300-1003517	BOLT, FLANGE 10×1.25×35	2	
7	94006-10410	NUT, FLANGE 10×1.25	2	
8	31200-A83-600F3	SUPPORT COMP, AUGER GEAR CASE	1	
9	91691-1018305	PACKING, 10×18×3	1	
10	92000-1001014	BOLT, 10×10	1	
11	31902-A71-001	PACKING, GEAR CASE COVER	1	
12	94319-60016	PIN, SPG 6×16	2	
13	91219-0825010	BOLT, SPECIAL 8×25	6	
14	31903-A83-001	LINER, SUPPORT 1.0	2	
15	31904-A83-001	LINER, SUPPORT 2.0	5	
16	94101-10010	WASHER, PLAIN 10	6	
17	92200-1004017	BOLT, 10×40	6	
18	91235-10100	NUT, HARD LOCK 10	6	
19	31905-A83-000F1	PLATE A	2	
21	31904-B72-000	SHIM, 2	1	
22	31903-B72-000	SHIM, 1	2	

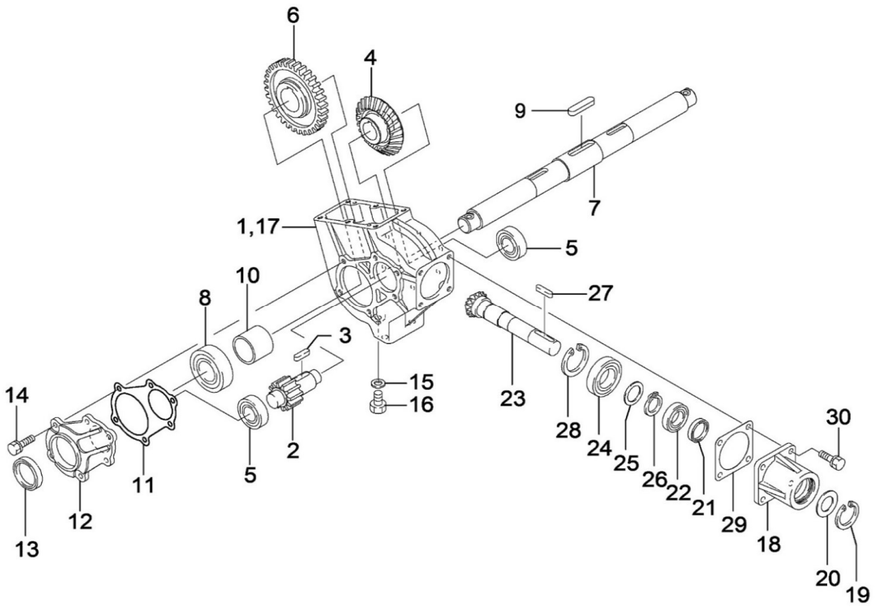

WADO CO., LTD
AUGER GEAR CASE (2) SX2211E

No.	Parts No.	Name	Quantity	Note
1	31911-A26-001	CASE, AUGER GEAR	1	
2	32903-A70-000	GEAR, SPUR M3.5×10	1	
3	97115-030241	KEY, 8×7×30RR	1	
4	32907-A70-001	GEAR, BEVEL M3×33	1	
5	96100-06205	BEARING, 6205	2	
6	32904-A70-000	GEAR, SPUR M3.5×35	1	
7	34901-B56-002	SHAFT, AUGER	1	
8	96100-06207	BEARING, 6207	2	
9	97117-032141	KEY, 12×8×32SR	1	
10	32905-A09-001	COLLAR, 40×40	1	
11	31903-A71-001	PACKING, GEAR CASE COVER	2	
12	31904-A09-030F1	COVER, GEAR CASE	2	
13	98251-3505511	SEAL, OIL D355511	2	
14	91219-0825010	BOLT, SPECIAL 8×25	12	
15	91691-1018305	PACKING, 10×18×3	1	
16	92000-1001614	BOLT, 10×16	1	
18	31906-A70-000	HOUSING, INPUT	1	
19	94520-45080	CIRCLIP, IN 45	1	
20	31906-A71-000	WASHER, PROTECT	1	
21	98251-2504008	SEAL, OIL D25408	1	
22	96100-06005	BEARING, 6005	1	
23	32901-B07-000	GEAR, BEVEL M3×14	1	
24	96100-06028	BEARING, 60/28	1	
25	32905-A70-000	WASHER, THRUST 28×40×2	1	
26	94510-28080	CIRCLIP, E× 28	1	
27	97114-033041	KEY, 7×7×33RR	1	
28	94520-52080	CIRCLIP, IN 52	1	
29	31905-A71-001	PACKING, INPUT HOUSING	1	
30	91219-0825010	BOLT, SPECIAL 8×25	4	

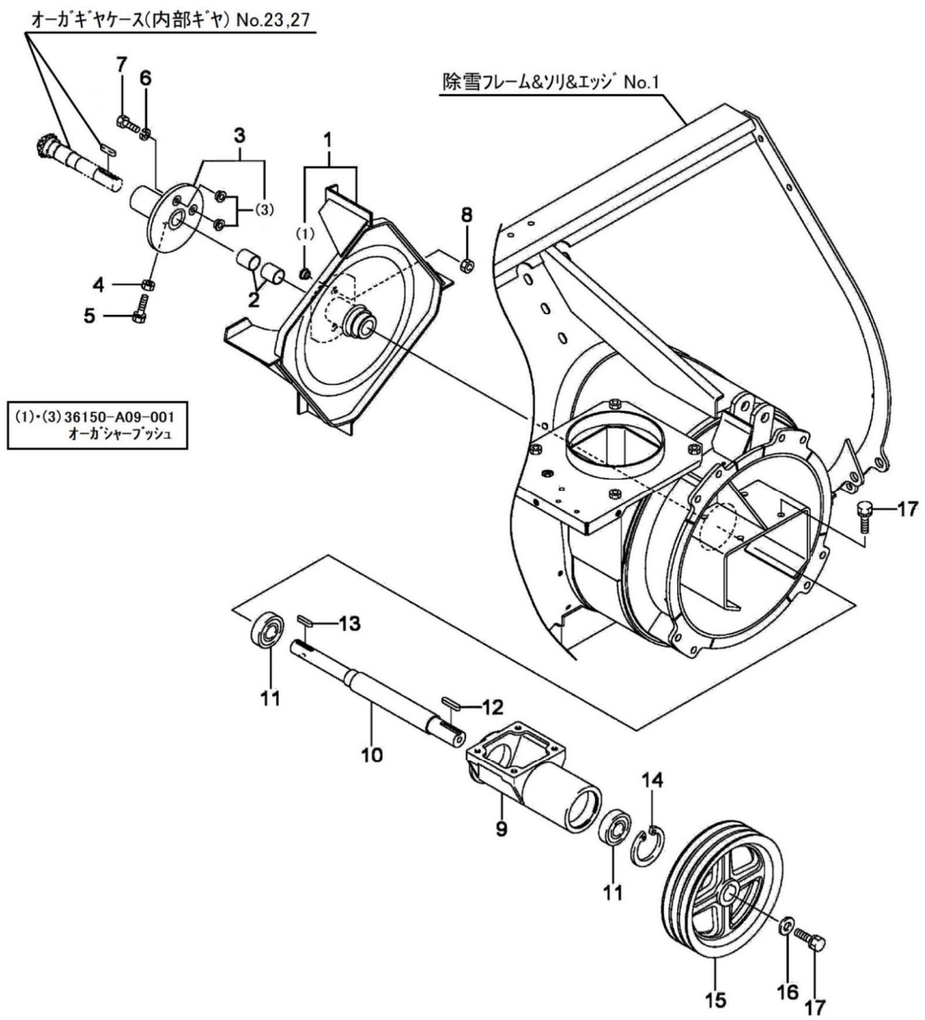

WADO CO., LTD
BLOWER SX2211E

No.	Parts No.	Name	Quantity	Note
1	36100-A91-808	BLOWER COMP	1	
2	91646-2530R	BUSH, BM2530FS	2	
3	36200-A91-000	JOINT COMP, AUGER	1	
4	94003-10412	NUT, SPECIAL 10	1	
5	91212-1030147	BOLT, SPECIAL 10×30	1	
6	94111-08012	WASHER, SPG 8	1	
7	92001-0802514	BOLT, 8×25	1	
8	94001-08412	NUT, 8	1	
9	36901-B18-000	HOUSING, BLOWER SHAFT	1	
10	34901-B16-000	SHAFT, BLOWER	1	
11	96105-06306	BEARING, 6306UU	2	
12	97115-040041	KEY, 8×7×40S	1	
13	97114-033041	KEY, 7×7×33RR	1	
14	94520-72080	CIRCLIP, IN 72	1	
15	63901-B53-000	PULLY, 231B-3×30	1	
16	91251-1035451	WASHER, RD 10×35×4.5	1	
17	93000-1002517	BOLT, SPECIAL 10×25	5	

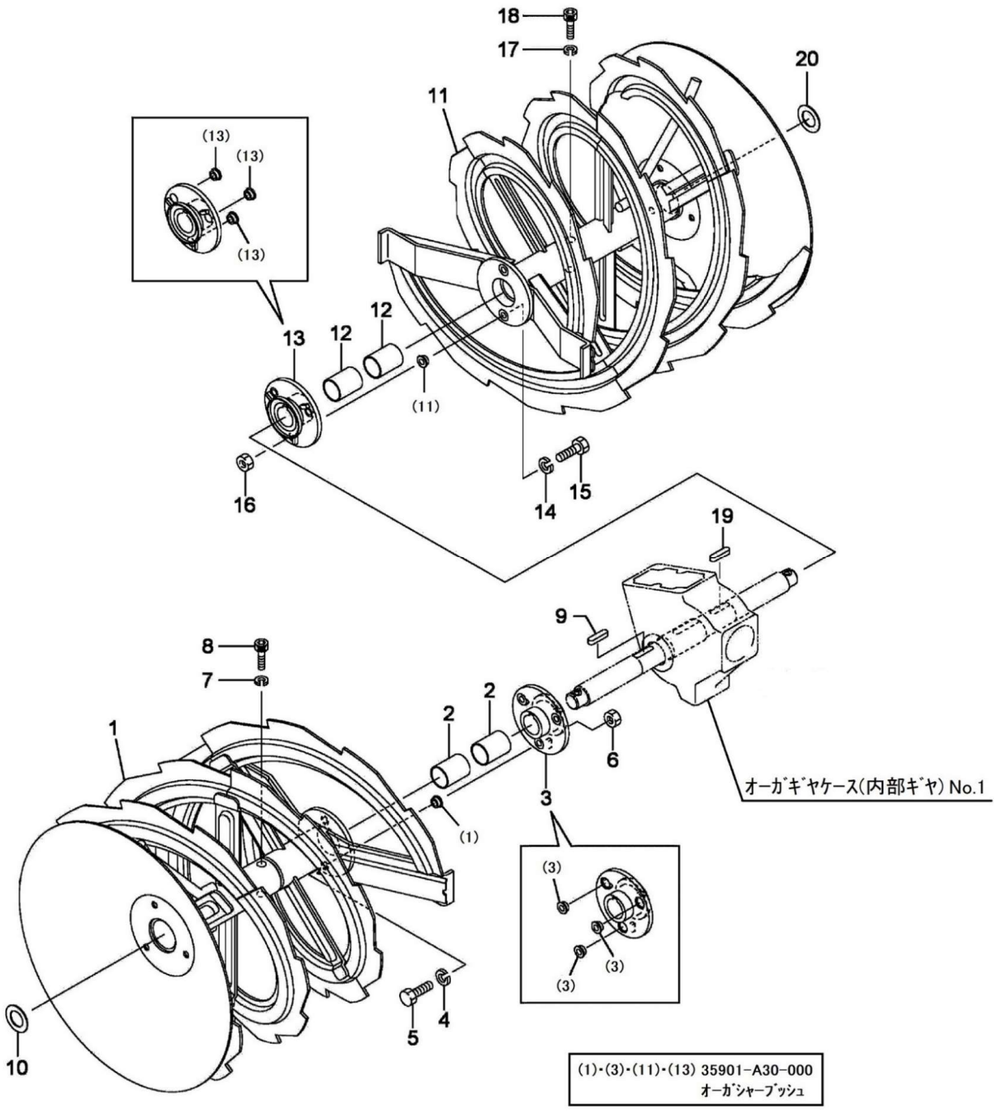

WADO CO., LTD
AUGER SX2211E

No.	Parts No.	Name	Quantity	Note
1	35100-B78-605	AUGER L COMP	1	
2	91646-3550R	BUSH, BM3550FS	2	
3	35500-B72-803	FLANGE COMP, AUGER SHARE	1	
4	94111-10012	WASHER, SPG 10	1	
5	92001-1003014	BOLT, 10×30	1	
6	94001-10412	NUT, 10	1	
7	94111-08012	WASHER, SPG 8	1	
8	93900-0803009	SCREW, 8×30	1	
9	97116-040241	KEY, 10×8×40RR	1	
10	91926-A09-000	WASHER, THRUST	1	
11	35200-B78-605	AUGER R COMP	1	
12	91646-3550R	BUSH, BM3550FS	2	
13	35500-B72-803	FLANGE COMP, AUGER SHARE	1	
14	94111-10012	WASHER, SPG 10	1	
15	92001-1003014	BOLT, 10×30	1	
16	94001-10412	NUT, 10	1	
17	94111-08012	WASHER, SPG 8	1	
18	93900-0803009	SCREW, 8×30	1	
19	97116-040241	KEY, 10×8×40RR	1	
20	91926-A09-000	WASHER, THRUST	1	

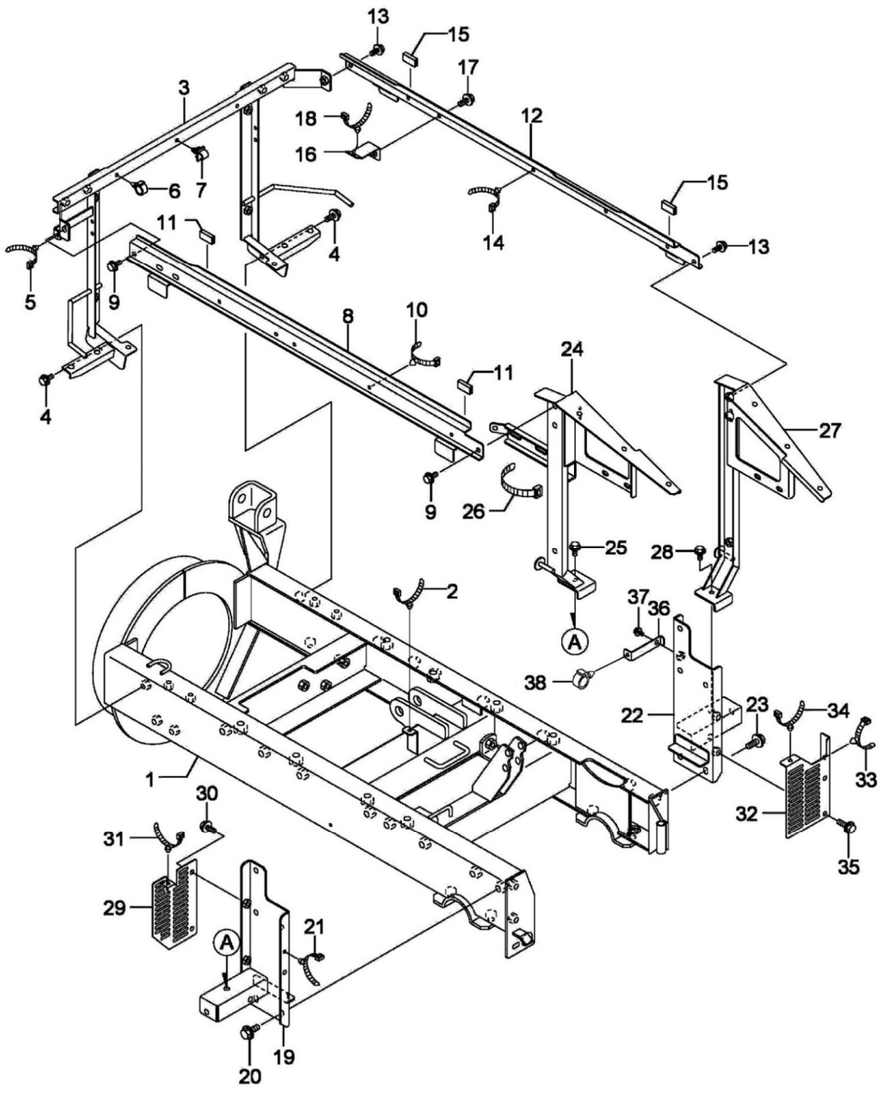

WADO CO., LTD
MAIN FRAME SX2211E

No.	Parts No.	Name	Quantity	Note
1	41100-B53-007	FRAME COMP, MAIN	1	
2	91314-119P7	STRAP, CABLE 1-19P7	1	
3	47700-B85-000	FRAME COMP, FRONT	1	
4	93100-0801617	BOLT, FLANGE 8×16	4	
5	91314-119P7	STRAP, CABLE 1-19P7	1	
6	91315-C1J77	CLIP, CABLE C-1J77	1	
7	91315-A3455	CLIP, CABLE A-3455	3	
8	47300-B86-000	COVER L COMP, SIDE	1	
9	93100-0801617	BOLT, FLANGE 8×16	2	
10	91314-11765	STRAP, CABLE 1-1765	2	
11	48903-B53-000	RUBBER, 12×25	2	
12	47400-B86-001	COVER R COMP, SIDE	1	
13	93100-0801617	BOLT, FLANGE 8×16	2	
14	91314-11765	STRAP, CABLE 1-1765	4	
15	48903-B53-000	RUBBER, 12×25	2	
16	57600-B85-000	STAY COMP, HYDRAULIC HOSE	1	
17	93100-0601217	BOLT, FLANGE 6×12	1	
18	91314-11765	STRAP, CABLE 1-1765	1	
19	41200-B85-000	BRACKET L COMP, PANEL	1	
20	93300-1002517	BOLT, FLANGE 10×1.25×25	2	
21	91314-119P7	STRAP, CABLE 1-19P7	1	
22	41300-B85-000	BRACKET R COMP, PANEL	1	
23	93300-1002517	BOLT, FLANGE 10×1.25×25	2	
24	48500-B85-003	FRAME L COMP, REAR COVER	1	
25	93100-0801617	BOLT, FLANGE 8×16	1	
26	91311-250	BAND, REPEAT RF250	1	
27	48600-B85-003	FRAME R COMP, REAR COVER	1	
28	93100-0801617	BOLT, FLANGE 8×16	1	
29	49901-B85-000	COVER FL, REAR	1	
30	93100-0801617	BOLT, FLANGE 8×16	2	
31	91314-119P7	STRAP, CABLE 1-19P7	1	
32	49903-B85-001	COVER RR, REAR	1	
33	91314-15782	STRAP, CABLE 1-5782	1	
34	91315-C2S12	CLIP, CABLE C-2S12	2	
35	93100-0801617	BOLT, FLANGE 8×16	2	
36	41901-B85-000	STAY, CABLE	1	
37	93100-0801617	BOLT, FLANGE 8×16	1	
38	91315-C2S12	CLIP, CABLE C-2S12	1	

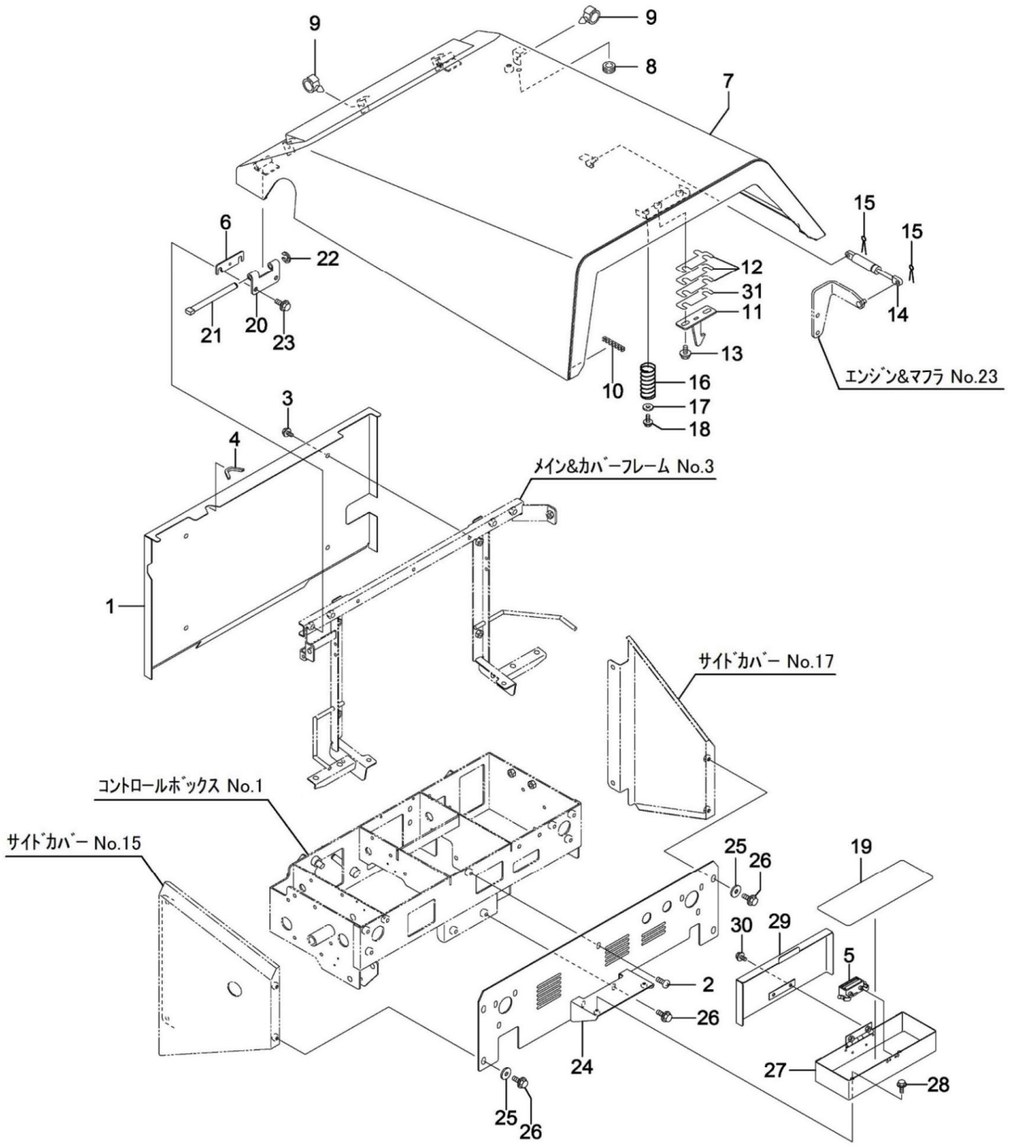

WADO CO., LTD
BONNET SX2211E

No.	Parts No.	Name	Quantity	Note
1	47901-B85-001	COVER, FRONT	1	
2	93400-0801614	BOLT, SPECIAL 8×16	1	
3	93100-0801657	BOLT, FLANGE 8×16	4	
4	91363-12050	PROTECTOR, EDGE 1.2t×50	1	
5	42901-B72-000	MAGNET, C-931	1	
6	48908-B72-000	SHIM	2	
7	48100-B85-005	BONNET COMP	1	
8	91351-1081020	BUSH, RUBBER BSB-21	1	
9	91315-C4397	CLIP, CABLE C-4397	2	
10	91360-12040	GROMMET, TH-12(40)	2	
11	76800-B56-001	HOOK COMP	1	
12	31902-B18-000	SHIM	3	
13	93100-0801617	BOLT, FLANGE 8×16	2	
14	40001-B18-001	DAMPER, 084603	1	
15	94210-25150	PIN, SPLIT 2.5×15	2	
16	91603-B18-000	SPRING, BONNET	1	
17	94101-06015	WASHER, PLAIN 6	1	
18	93100-0601617	BOLT, FLANGE 6×16	1	
19	42901-B53-000	RUBBER	1	
20	49901-B72-002	HINGE, BONNET	2	
21	49902-B72-000	PIN, HINGE	2	
22	94511-07010	RING E, 7	2	
23	93100-0802017	BOLT, FLANGE 8×20	4	
24	49600-B78-001	COVER COMP, REAR	1	
25	94101-08015	WASHER, PLAIN 8	4	
26	93100-0801617	BOLT, FLANGE 8×16	6	
27	42100-B72-031	BOX COMP, TOOL	1	
28	93100-0601217	BOLT, FLANGE 6×12	2	
29	42200-B72-000	COVER COMP, TOOL BOX	1	
30	93100-0601257	BOLT, FLANGE 6×12	2	
31	31903-B18-000	SHIM, 0.6	1	

WADO CO., LTD

SIDE COVER SX2211E

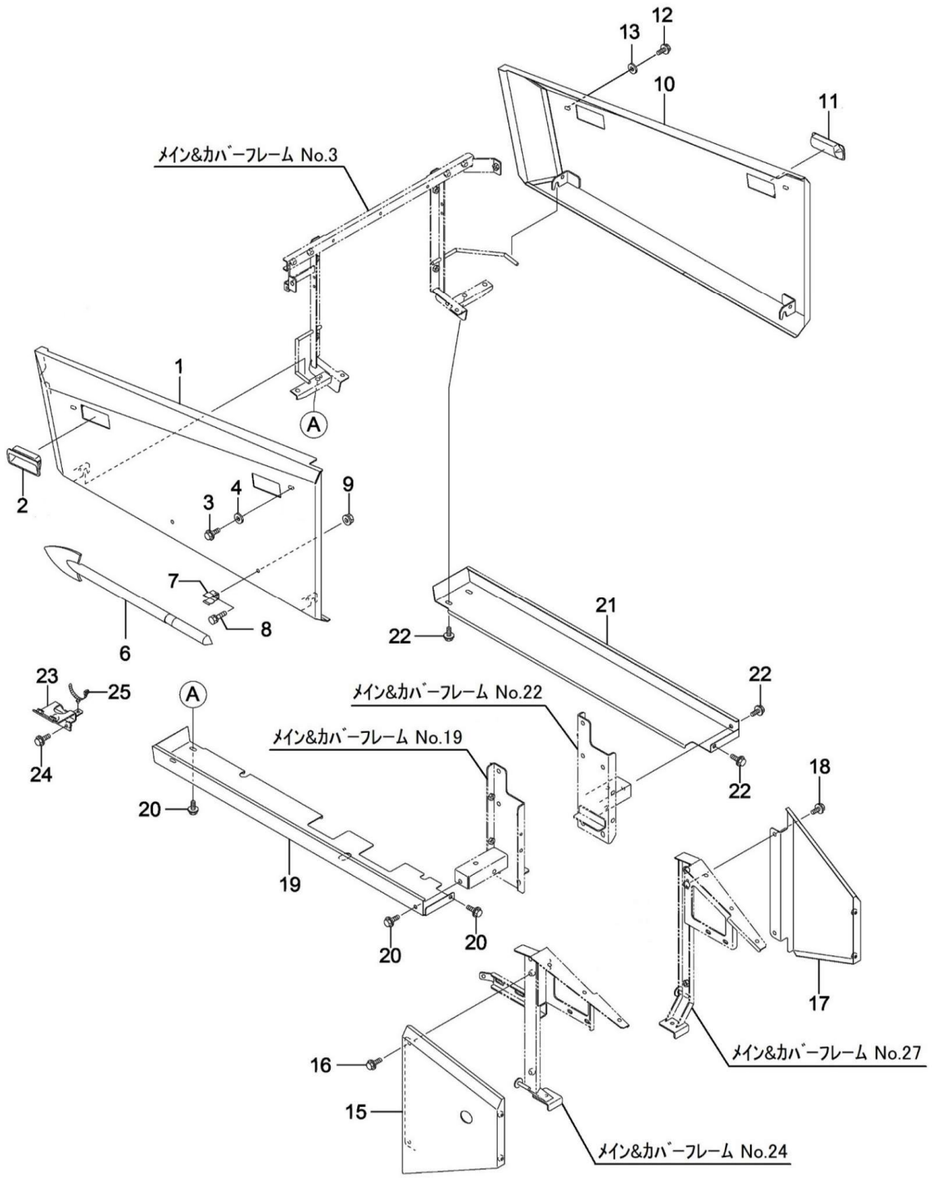

WADO CO., LTD

SIDE COVER SX2211E

No.	Parts No.	Name	Quantity	Note
1	49500-B86-000	STAY L COMP, COVER	1	
2	48901-B69-030	HANDLE, AP-197-1-3	2	
3	93100-0801617	BOLT, FLANGE 8×16	2	
4	94101-08015	WASHER, PLAIN 8	2	
6	39901-B51-001	BAR, SNOW DROP	1	
7	39902-A65-001	STOPPER, BAR	2	
8	92200-0801617	BOLT, 8×16	2	
9	94002-08410	NUT, FLANGE 8	2	
10	49600-B86-000	STAY R COMP, COVER	1	
11	48901-B69-030	HANDLE, AP-197-1-3	2	
12	93100-0801617	BOLT, FLANGE 8×16	2	
13	94101-08015	WASHER, PLAIN 8	2	
15	48700-B85-001	COVER L COMP, REAR SIDE	1	
16	93100-0801617	BOLT, FLANGE 8×16	2	
17	48800-B85-001	COVER R COMP, REAR SIDE	1	
18	93100-0801617	BOLT, FLANGE 8×16	2	
19	48903-B85-002	COVER L, UNDER	1	
20	93100-0801617	BOLT, FLANGE 8×16	4	
21	48904-B85-002	COVER R, UNDER	1	
22	93100-0801617	BOLT, FLANGE 8×16	4	
23	47500-B85-001	BRACKET COMP, MUFFLER	1	
24	93100-0801617	BOLT, FLANGE 8×16	2	
25	91314-119P7	STRAP, CABLE 1-19P7	1	

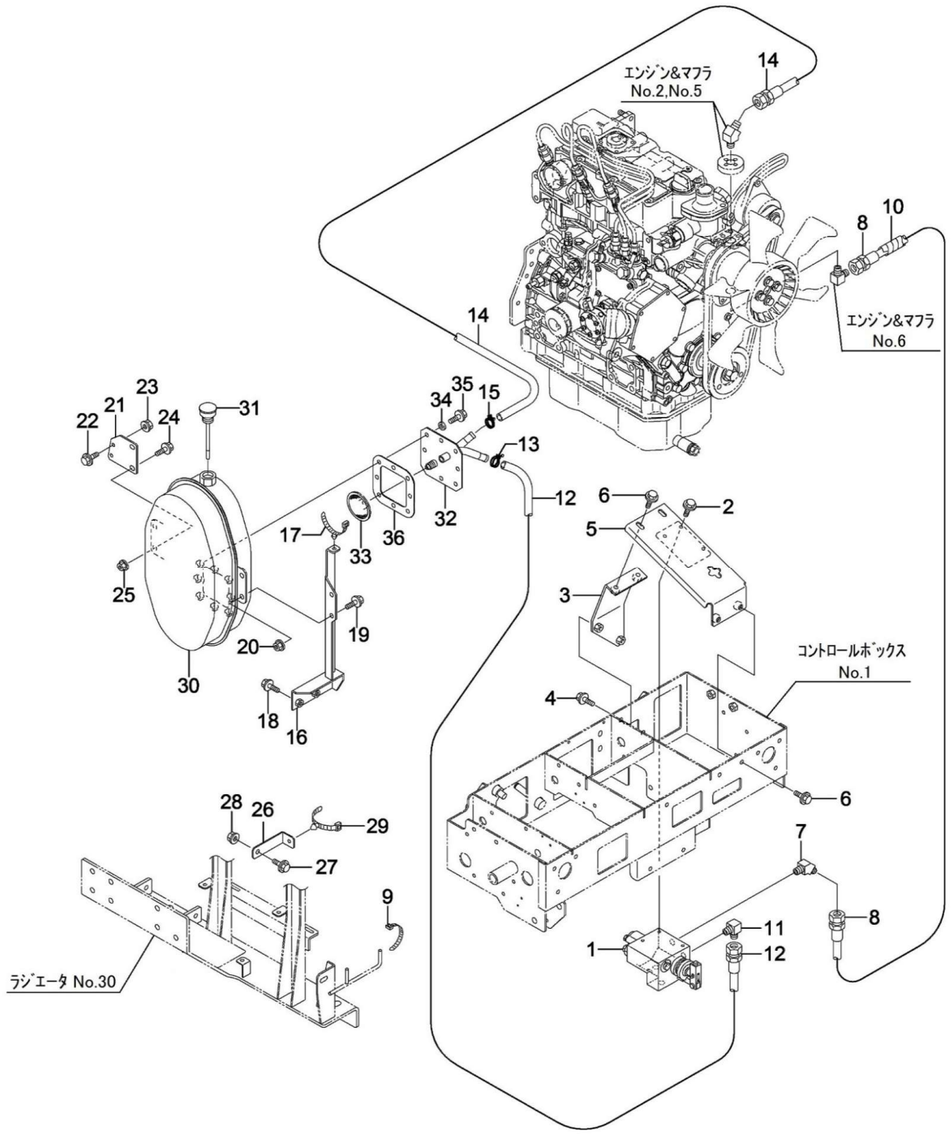

WADO CO., LTD
HYDRAULIC PUMP & VALVE SX2211E

No.	Parts No.	Name	Quantity	Note
1	50001-B53-003	VALVE, DCV1	1	
2	93100-0602017	BOLT, FLANGE 6×20	3	
3	51200-B51-000	BRACKET COMP, VALVE BASE	1	
4	93100-0801617	BOLT, FLANGE 8×16	2	
5	51100-B74-001	BASE COMP, VALVE	1	
6	93100-0801617	BOLT, FLANGE 8×16	4	
7	91551-3024004	JOINT, ELBOW 302404 45°	1	
8	91545-2209533	HOSE, HYDRAULIC SPL 1/4×950	1	
9	91311-250	BAND, REPEAT RF250	2	
10	91382-1502501	CORRUGATE 15×250	1	
11	51903-B53-001	JOINT, ELBOW PT1/4×PF1/2 90°	1	
12	91541-4012030	HOSE, HYDRAULIC 1/2×1200	1	
13	91323-019	CLAMP, HOSE 19	1	
14	91541-4007030	HOSE, HYDRAULIC 1/2×700	1	
15	91323-019	CLAMP, HOSE 19	1	
16	57400-B85-001	BASE COMP, OIL TANK	1	
17	91314-119P7	STRAP, CABLE 1-19P7	1	
18	93100-0802017	BOLT, FLANGE 8×20	2	
19	93100-0801617	BOLT, FLANGE 8×16	2	
20	94002-08410	NUT, FLANGE 8	2	
21	57902-B85-000	STAY, TANK OIL	1	
22	93100-0601617	BOLT, FLANGE 6×16	2	
23	94002-06410	NUT, FLANGE 6	2	
24	93100-0801617	BOLT, FLANGE 8×16	2	
25	94002-08410	NUT, FLANGE 8	2	
26	57903-B85-000	STAY, HYDRAULIC HOSE	1	
27	93100-0802017	BOLT, FLANGE 8×20	1	
28	94002-08410	NUT, FLANGE 8	1	
29	91314-11765	STRAP, CABLE 1-1765	1	
30	51600-G30-005	TANK COMP, OIL	1	
31	51901-G30-000	CAP, OIL	1	
32	57200-B84-000	JOINT COMP, HOSE	1	
33	51906-G30-000	STRANE	1	
34	91526-WF8	WASHER, SEAL WF-8	8	
35	93100-0801617	BOLT, FLANGE 8×16	8	
36	51905-G30-001	PACKING	1	

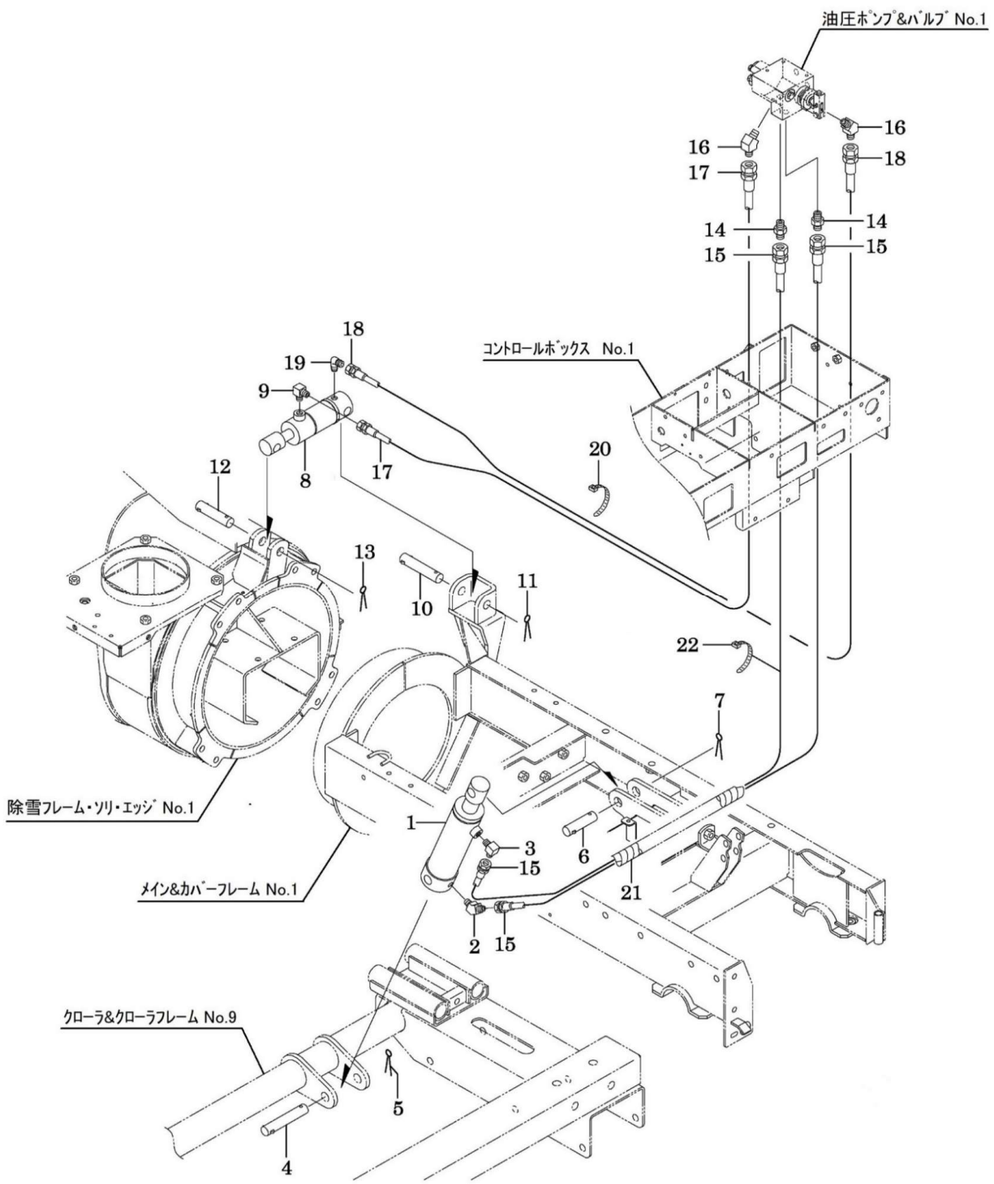

WADO CO., LTD
HYDRAULIC CYLINDER SX2211E

No.	Parts No.	Name	Quantity	Note
1	50001-B56-000	CYLINDER ASSY, HYDRAULIC φ60×115	1	
2	51901-B53-001	JOINT, SPECIAL ELBOW 45°	1	
3	91551-3024004	JOINT, ELBOW 302404 45°	1	
4	91261-201101	PIN, 20×110	1	
5	94210-40400	PIN, SPLIT 4×40	1	
6	91261-200751	PIN, 20×75	1	
7	94210-40400	PIN, SPLIT 4×40	1	
8	50200-B88-000	CYLINDER ASSY, HYDRAULIC 20×40×60	1	
9	91551-3022004	JOINT, ELBOW 302204 90°	1	
10	91261-180951	PIN, 18×95	1	
11	94210-40400	PIN, SPLIT 4×40	1	
12	91261-180751	PIN, 18×75	1	
13	94210-40400	PIN, SPLIT 4×40	1	
14	91551-3002004	ADAPTER, 3002F04	2	
15	91541-2313533	HOSE, HYDRAULIC 1/4×1350	2	
16	91551-3024004	JOINT, ELBOW 302404 45°	2	
17	91545-2215433	HOSE, HYDRAULIC SPL 1/4×1540	1	
18	91545-2214333	HOSE, HYDRAULIC SPL 1/4×1430	1	
19	67901-A64-001	JOINT, SPECIAL ELBOW 90°	1	
20	91311-140	BAND, REPEAT RF140	1	
21	91382-2505001	CORRUGATE 25×500	1	
22	91311-140	BAND, REPEAT RF140	1	

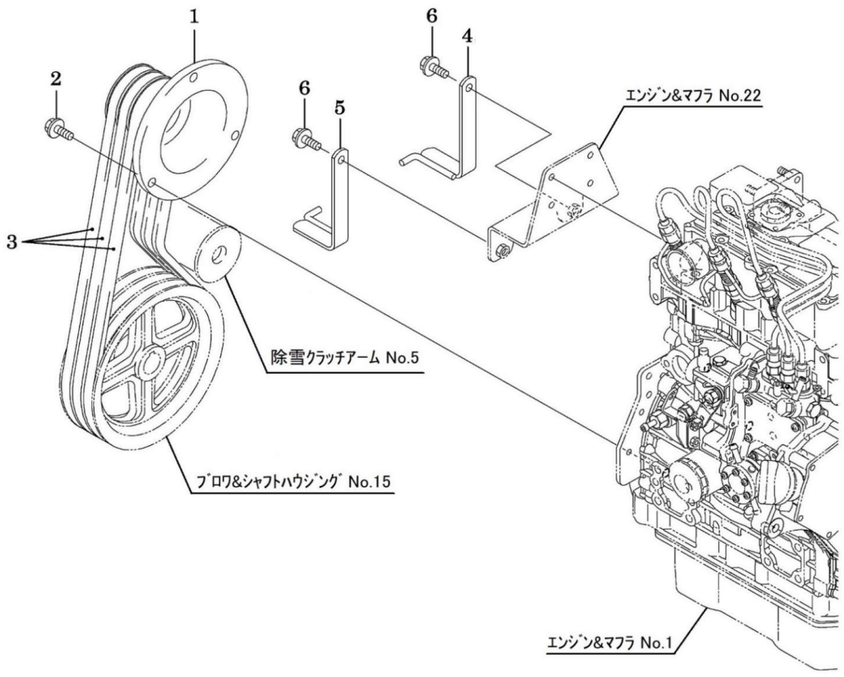

WADO CO., LTD
POWER TRANSMISSION (AUGER) SX2211E

No.	Parts No.	Name	Quantity	Note
1	02901-B53-000	PULLEY, ENGINE	1	
2	93000-1203017	BOLT, SPECIAL 12×30	3	
3	91652-0808044	BELT W800, SB44	3	
4	65400-B85-030	STOPPER R COMP, ENGINE BELT	1	
5	65300-B85-030	STOPPER L COMP, ENGINE BELT	1	
6	93300-1202017	BOLT, FLANGE 12×1.25×20	2	

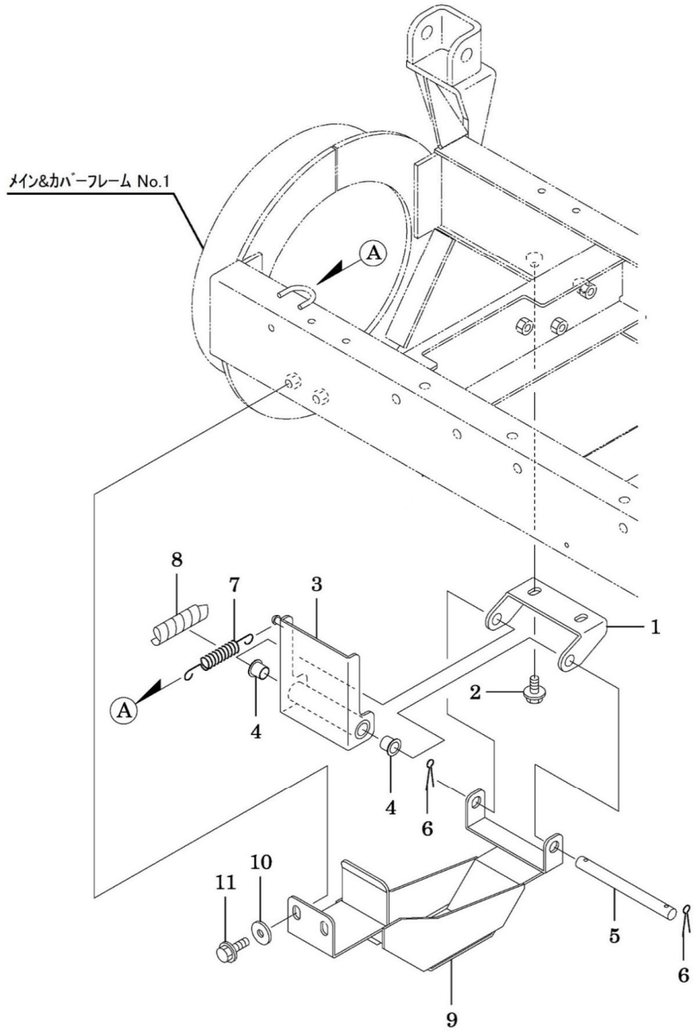

WADO CO., LTD
BLOWER BRAKE SX2211E

No.	Parts No.	Name	Quantity	Note
1	65902-B53-000	BRACKET, BRAKE	1	
2	93300-1002017	BOLT, FLANGE 10×1.25×20	2	
3	65100-B53-000	BRAKE COMP, BLOWER	1	
4	91644-151580	BUSH, 80F-1515	2	
5	65901-B53-000	PIN, 15×160	1	
6	94210-40300	PIN, SPLIT 4×30	2	
7	66907-A84-000	SPRING, BRAKE	1	
8	91580-1500601	TUBE, SPIRAL 15×60	1	
9	65300-B53-001	STOPPER COMP, BLOWER BELT	1	
10	94101-10015	WASHER, PLAIN 10	2	
11	93300-1002017	BOLT, FLANGE 10×1.25×20	2	

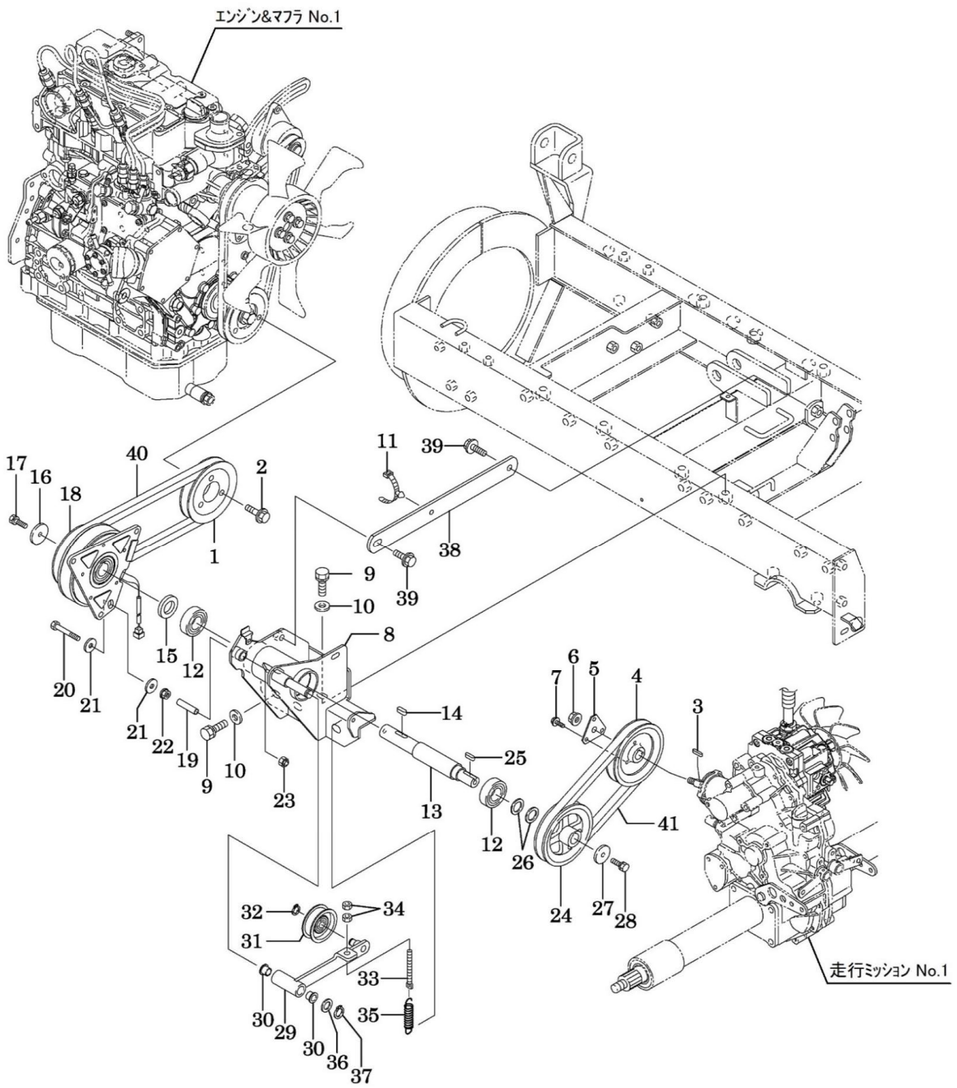

WADO CO., LTD
POWER TRANSMISSION (DRIVE) SX2211E

No.	Parts No.	Name	Quantity	Note
1	02902-B54-000	PULLEY, ENGINE	1	
2	93000-1003017	BOLT, SPECIAL 10×30	3	
3	97112-022241	KEY, 5×5×22RR	1	
4	63902-B54-000	PULLEY, INPUT HST	1	
5	16901-B54-000	PLATE, FIXING	1	
6	94006-10410	NUT, FLANGE 10×1.25	1	
7	93100-0601617	BOLT, FLANGE 6×16	3	
8	61100-B85-001	BRACKET COMP, COUNTER	1	
9	93000-1203017	BOLT, SPECIAL 12×30	5	
10	94101-12010	WASHER, PLAIN 12	5	
11	91315-C1U68	CLIP, CABLE C-1U68	1	
12	96105-06205	BEARING, 6205UU	2	
13	64901-B85-000	SHAFT, COUNTER	1	
14	97114-020041	KEY, 7×7×20S	1	
15	64902-B85-000	COLLAR, COUNTER SHAFT	1	
16	91251-0840451	WASHER, RD 8×40×4.5	1	
17	91219-0825010	BOLT, SPECIAL 8×25	1	
18	67100-B54-001	CLUTCH COMP, ELECTROMAGNETIC	1	
19	91544-0730030	TUBE, GASOLINE 7.3×30	1	
20	92201-0805517	BOLT, 8×55	1	
21	94101-08015	WASHER, PLAIN 8	2	
22	94002-08410	NUT, FLANGE 8	1	
23	91233-084120	NUT, SPECIAL 8	1	
24	63902-B18-000	PULLY, 113B×20	1	
25	97113-020041	KEY, 6×6×20S	1	
26	91251-2030231	WASHER, RD 20×30×2.3	2	
27	91251-0835451	WASHER, RD 8×35×4.5	1	
28	91219-0825010	BOLT, SPECIAL 8×25	1	
29	66300-B85-001	ARM B COMP, DRIVE TENSION	1	
30	91642-1512R	BUSH, BM1512F23FS	2	
31	91615-12503743	PULLEY, TENSION 50TA2	1	
32	94510-12080	CIRCLIP, EX 12	1	
33	65901-A09-001	BOLT, TENSION	1	
34	94003-08412	NUT, SPECIAL 8	2	
35	91601-A32-001	SPRING, TENSION	1	
36	91251-1525231	WASHER, RD 15×25×2.3	1	
37	94510-15080	CIRCLIP, EX 15	1	
38	61901-B53-000	SUPPORT, TENSION BASE	1	
39	93300-1002517	BOLT, FLANGE 10×1.25×25	2	
40	91652-0808034	BELT W800, SB34	1	
41	91652-0808030	BELT W800, SB30	1	

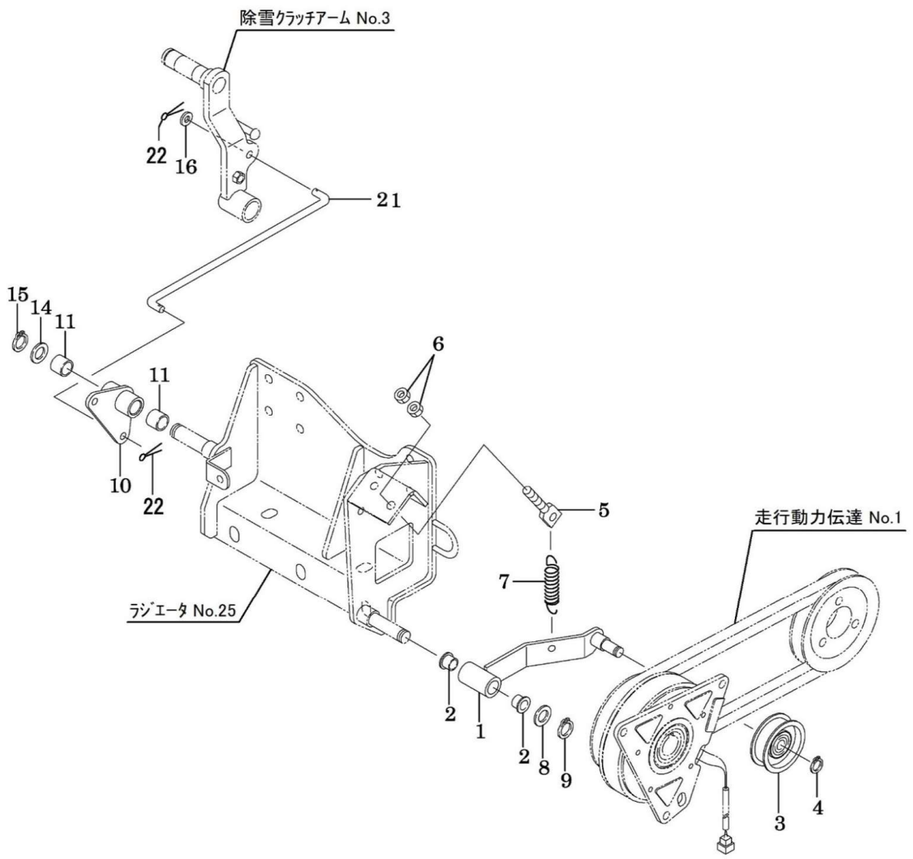

WADO CO., LTD
TENSION ARM (DRIVE) SX2211E

No.	Parts No.	Name	Quantity	Note
1	66200-B85-001	ARM A COMP, DRIVE TENSION	1	
2	91642-1512R	BUSH, BM1512F23FS	2	
3	91615-12503743	PULLEY, TENSION 50TA2	1	
4	94510-12080	CIRCLIP, EX 12	1	
5	65901-A09-001	BOLT, TENSION	1	
6	94003-08412	NUT, SPECIAL 8	2	
7	91601-A32-001	SPRING, TENSION	1	
8	91251-1525231	WASHER, RD 15×25×2.3	1	
9	94510-15080	CIRCLIP, EX 15	1	
10	66400-B53-000	ARM COMP, COUNTER	1	
11	91646-1512R	BUSH, BM1512FS	2	
14	91251-1525231	WASHER, RD 15×25×2.3	1	
15	94510-15080	CIRCLIP, EX 15	1	
16	94101-08010	WASHER, PLAIN 8	1	
21	66901-B53-030	ROD, 288	1	
22	94210-30200	PIN, SPLIT 3×20	2	

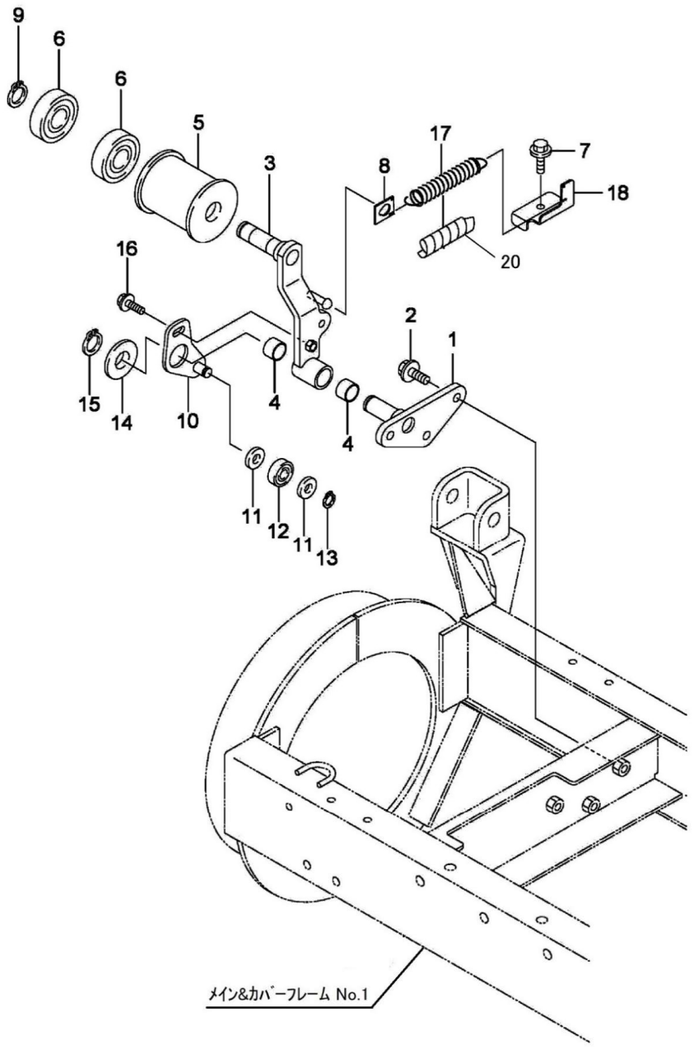

WADO CO., LTD
AUGER CLUTCH SX2211E

No.	Parts No.	Name	Quantity	Note
1	66400-B18-002	SHAFT COMP, BLOWER TENSION	1	
2	93300-1002517	BOLT, FLANGE 10×1.25×25	3	
3	66100-B53-002	ARM COMP, AUGER CLUTCH	1	
4	91646-2015R	BUSH, BM2015FS	2	
5	66901-B79-001	PULLEY, TENSION 60-74	1	
6	96105-06304	BEARING, 6304UU	2	
7	93100-0802017	BOLT, FLANGE 8×20	1	
8	66903-B53-000	HOOK, SPRING	1	
9	94510-20080	CIRCLIP, EX 20	1	
10	65200-B53-000	CAM COMP, BRAKE	1	
11	94101-12010	WASHER, PLAIN 12	2	
12	96105-06201	BEARING, 6201UU	1	
13	94510-12080	CIRCLIP, EX 12	1	
14	94101-20010	WASHER, PLAIN 20	1	
15	94510-20080	CIRCLIP, EX 20	1	
16	93100-0802517	BOLT, FLANGE 8×25	1	
17	66902-B53-000	SPRING, TENSION RETURN	1	
18	66901-B85-000	HOLDER, SPRING	1	
20	91580-1501501	TUBE, SPIRAL 15×150	1	

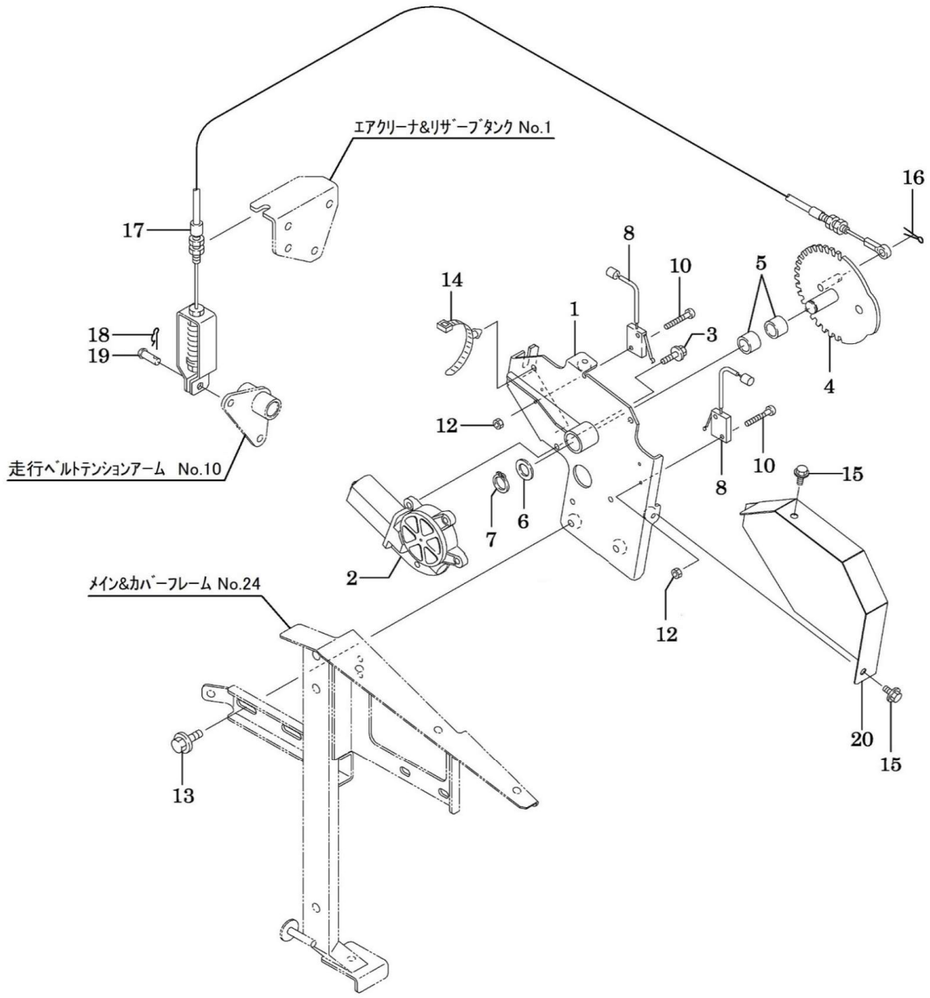

WADO CO., LTD
ELECTRIC CLUTCH SX2211E

No.	Parts No.	Name	Quantity	Note
1	66500-B85-002	BASE COMP, ELECTRIC CLUTCH	1	
2	81100-B53-002	MOTOR, JC578VA	1	
3	93100-0602017	BOLT, FLANGE 6×20	3	
4	66600-B53-802	GEAR COMP, CLUTCH	1	
5	91647-1515	BUSH, 77B-1515	2	
6	91251-1525231	WASHER, RD 15×25×2.3	1	
7	94510-15080	CIRCLIP, EX 15	1	
8	83100-B10-000	SWITCH, CHUTE	2	
9	-	-		
10	83901-B10-000	BOLT, SPECIAL M3×20	4	
11	-	-		
12	94002-03410	NUT, FLANGE 3	4	
13	93100-0801617	BOLT, FLANGE 8×16	2	
14	91314-119P7	STRAP, CABLE 1-19P7	1	
15	93100-0601217	BOLT, FLANGE 6×12	2	
16	94210-25150	PIN, SPLIT 2.5×15	1	
17	77100-B53-002	WIRE, AUGER CLUTCH	1	
18	94251-080111	PIN, SNAP A8×1.8	1	
19	94330-0802210	PIN, 8×22	1	
20	68901-B85-000	COVER, ELECTRIC CLUTCH	1	

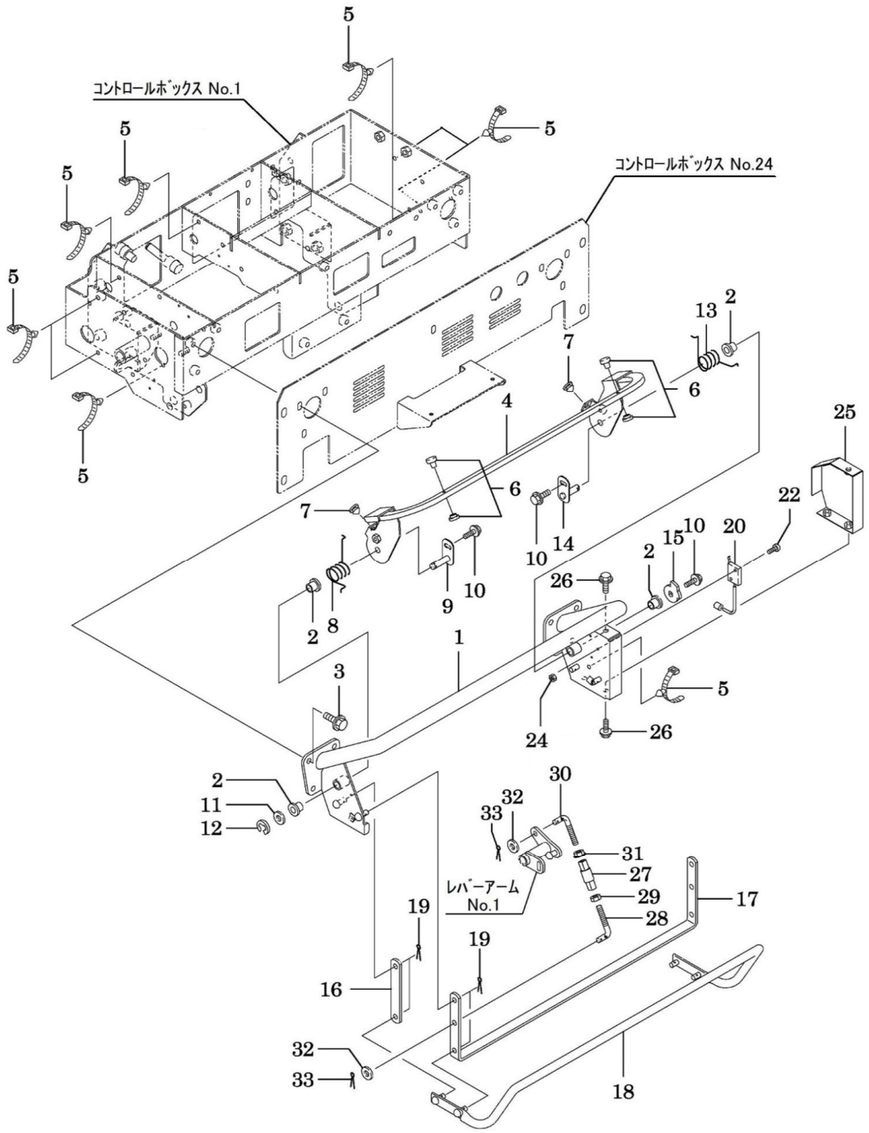

WADO CO., LTD
HANDLE SX2211E

No.	Parts No.	Name	Quantity	Note
1	72400-B78-601	HANDLE COMP	1	
2	91644-101080	BUSH, 80F-1010	4	
3	93100-0802017	BOLT, FLANGE 8×20	6	
4	73100-B78-001	LEVER COMP, CLUTCH	1	
5	91314-119P7	STRAP, CABLE 1-19P7	9	
6	71902-B28-000	RIVET	2	
7	91701-A41-000	GROMMET, φ6	2	
8	72901-B56-001	SPRING L, RETURN	1	
9	74600-B56-000	PIN B COMP, LEVER	1	
10	93100-0601217	BOLT, FLANGE 6×12	3	
11	94101-10010	WASHER, PLAIN 10	1	
12	94511-08010	E RING, 8	1	
13	72902-B56-001	SPRING R, RETURN	1	
14	74500-B56-001	PIN A COMP, LEVER	1	
15	74903-B56-000	CAM B, SWITCH	1	
16	73909-B43-000	LINK 100, LEVER	2	
17	73901-B78-000	LEVER B, EMERGENCY STOP	1	
18	73600-B78-000	LEVER A COMP, EMERGENCY	1	
19	94210-25150	PIN, SPLIT 2.5×15	8	
20	83100-B10-000	SWITCH, CHUTE	1	
21	-	-		
22	83901-B10-000	BOLT, SPECIAL M3×20	2	
23	-	-		
24	94002-03410	NUT, FLANGE 3	2	
25	78400-B56-001	COVER D COMP, SWITCH	1	
26	93100-0601217	BOLT, FLANGE 6×12	3	
27	76902-B50-000	LINK, 50	1	
28	74904-B56-000	ROD L, ADJUST	1	
29	91231-0841210	NUT, SPECIAL 8	1	
30	74905-B56-000	ROD R, ADJUST	1	
31	94002-08410	NUT, FLANGE 8	1	
32	94101-08010	WASHER, PLAIN 8	2	
33	94210-25150	PIN, SPLIT 2.5×15	2	

WADO CO., LTD

INDICATOR PANEL SX2211E

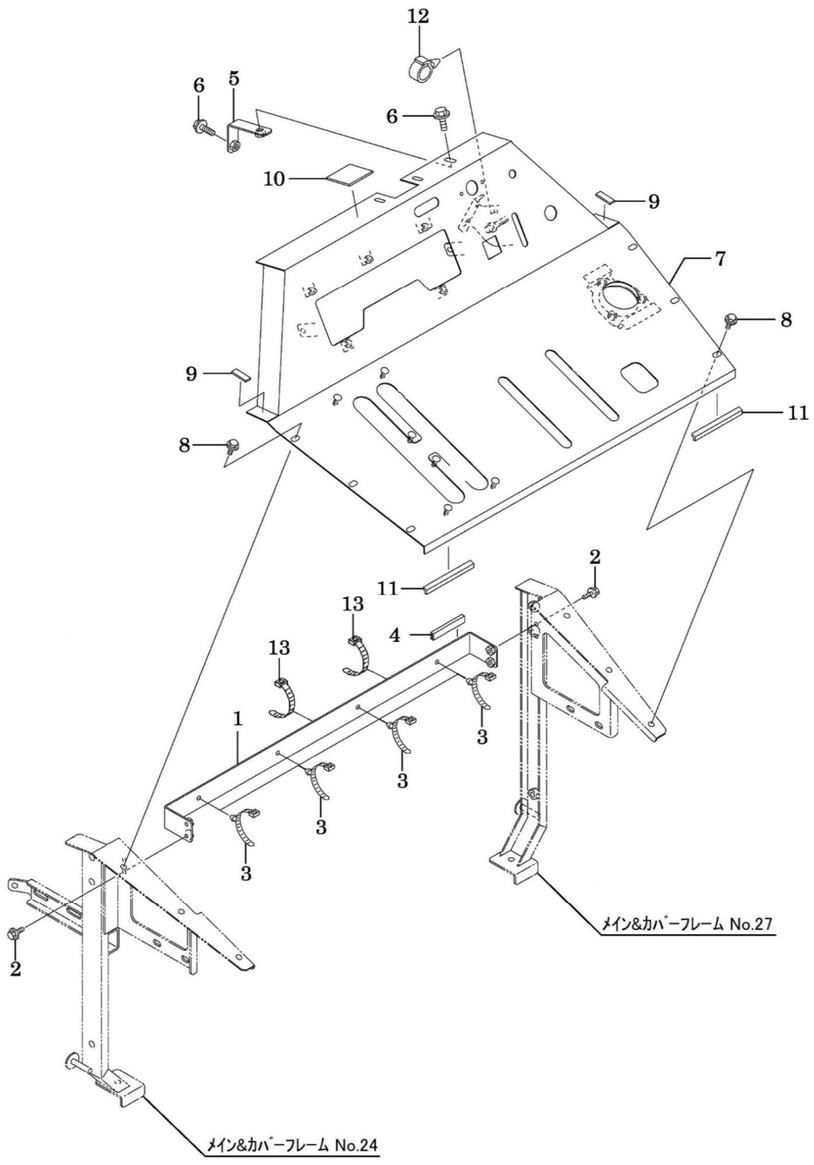

WADO CO., LTD

INDICATOR PANEL SX2211E

No.	Parts No.	Name	Quantity	Note
1	82200-B78-000	STAY COMP, HARNESS	1	
2	93100-0601617	BOLT, FLANGE 6×16	4	
3	91314-15782	STRAP, CABLE 1-5782	4	
4	48903-B53-000	RUBBER, 12×25	1	～No.207524
	85901-B65-000	RUBBER, 12×80	1	No.207525～
5	82200-B85-000	STAY COMP, PANEL	1	
6	93100-0801617	BOLT, FLANGE 8×16	2	
7	82100-B85-001	PANEL COMP, INDICATOR	1	
8	93100-0601257	BOLT, FLANGE 6×12	6	
9	72901-B43-000	RUBBER, 15×30×5	2	
10	21905-B18-000	RUBBER, 50×50×3.0	1	
11	82904-B56-000	SPONGE, 15×100	2	
12	91315-C4397	CLIP, CABLE C-4397	1	
13	91311-250	BAND, REPEAT RF250	2	

WADO CO., LTD
CONTROL BOX SX2211E

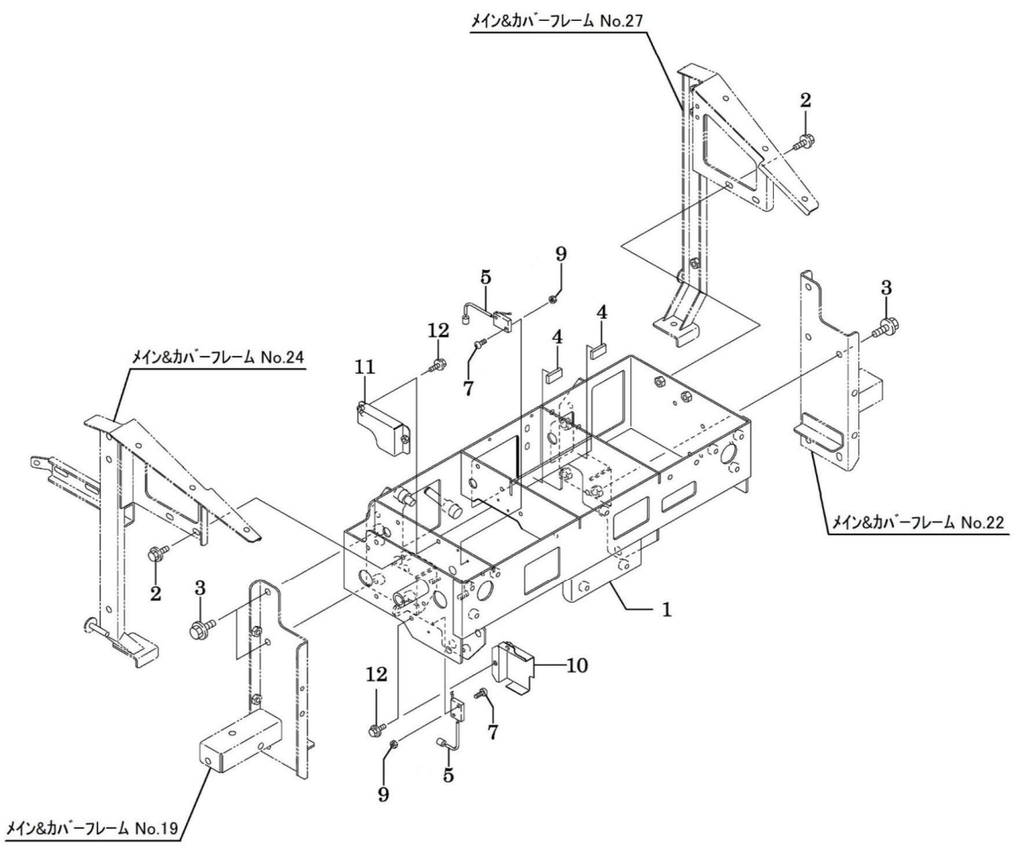

WADO CO., LTD
CONTROL BOX SX2211E

No.	Parts No.	Name	Quantity	Note
1	72200-B85-002	BOX COMP, CONTROL	1	
2	93100-0801617	BOLT, FLANGE 8×16	4	
3	93300-1002017	BOLT, FLANGE 10×1.25×20	6	
4	72901-B43-000	RUBBER, 15×30×5	2	
5	83100-B10-000	SWITCH, CHUTE	2	
6	-	-		
7	83901-B10-000	BOLT, SPECIAL M3×20	4	
8	-	-		
9	94002-03410	NUT, FLANGE 3	4	
10	78100-B54-000	COVER A COMP, SWITCH	1	
11	78300-B56-000	COVER C COMP, SWITCH	1	
12	93100-0601217	BOLT, FLANGE 6×12	4	

WADO CO., LTD

LEVER ARM

SX2211E

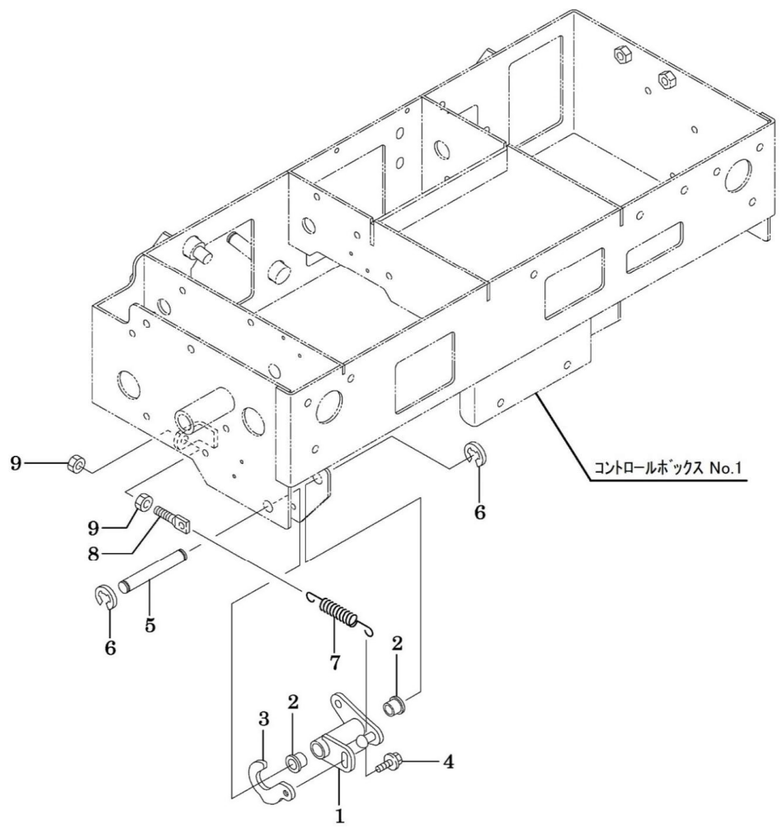

WADO CO., LTD

LEVER ARM

SX2211E

No.	Parts No.	Name	Quantity	Note
1	74100-B78-000	ARM COMP, LEVER	1	
2	91644-121080	BUSH, 80F-1210	2	
3	74902-B56-000	CAM A, SWITCH	1	
4	93100-0601217	BOLT, FLANGE 6×12	1	
5	73902-B78-000	PIN, 12×80	1	
6	94511-09010	RING E, 9	2	
7	91601-B50-003	SPRING, COIL 10×118	1	
8	16904-M65-000	ROD, TENSION	1	
9	94003-08412	NUT, SPECIAL 8	2	

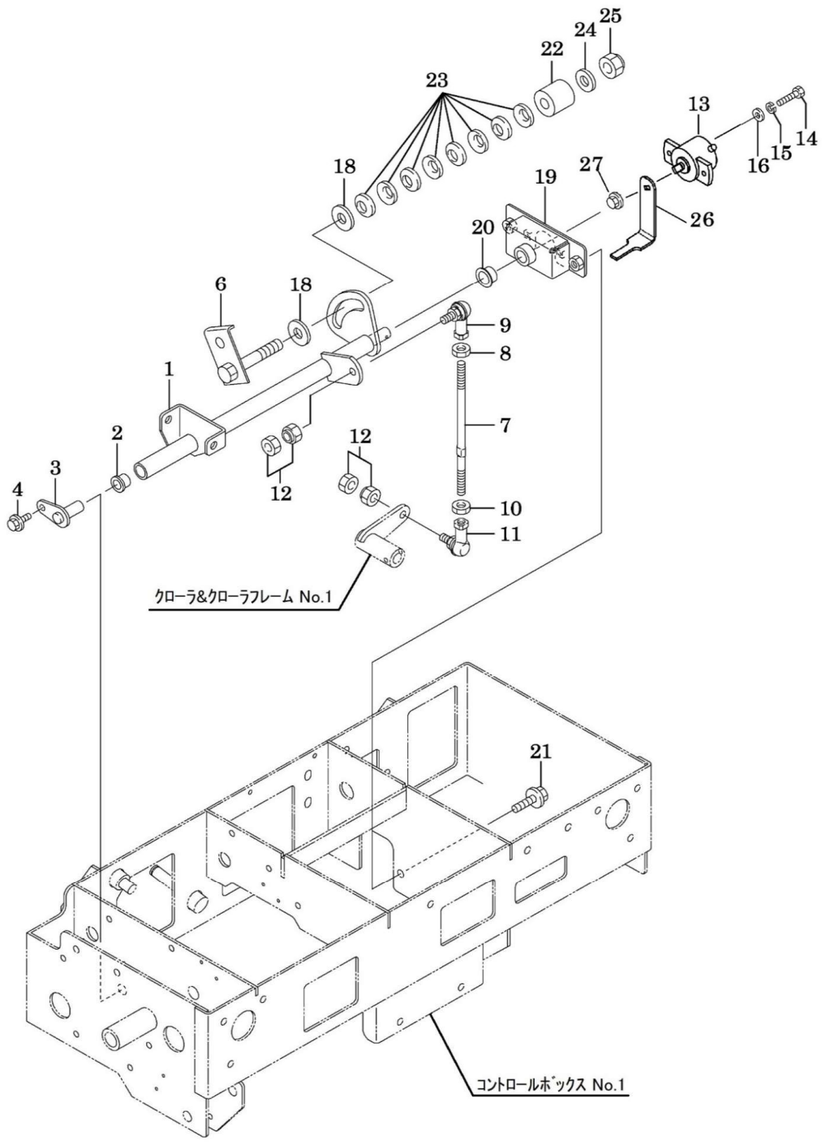

WADO CO., LTD
CHANGE LEVER BOSS SX2211E

No.	Parts No.	Name	Quantity	Note
1	75100-B85-030	BOSS COMP, CHANGE LEVER	1	
2	91644-121080	BUSH, 80F-1210	1	
3	74500-B43-801	PIN 30 COMP, LEVER	1	
4	93100-0601217	BOLT, FLANGE 6×12	1	
5	-	-		
6	75500-B85-000	BOLT COMP, TENSION	1	
7	75901-B50-000	ROD A, CHANGE	1	
8	94002-08410	NUT, FLANGE 8	1	
9	91634-080211	JOINT, BALL BL8D	1	
10	91231-0841210	NUT, SPECIAL 8	1	
11	91634-080221	JOINT, BALL BL8DL	1	
12	91235-08100	NUT, HARD LOCK 8	2	
13	83100-B89-001	SENSOR, ANGLE RPA211	1	
14	92000-0401614	BOLT, 4×16	2	
15	94111-04012	WASHER, SPG 4	2	
16	94101-04010	WASHER, PLAIN 4	2	
17	-	-		
18	91648-8012	WASHER, 80W-12	2	
19	75200-B97-001	HOLDER COMP	1	
20	91644-121080	BUSH, 80F-1210	1	
21	93100-0801217	BOLT, FLANGE 8×12	2	
22	72904-B85-000	COLLAR, FRICTION	1	
23	91252-121	SPRING L, PLATE 12	8	
24	94101-12010	WASHER, PLAIN 12	1	
25	91233-124111	NUT, SPECIAL 12×1.25	1	
26	75903-B97-000	PLATE, SENSOR	1	
27	94002-06410	NUT, FLANGE 6	1	

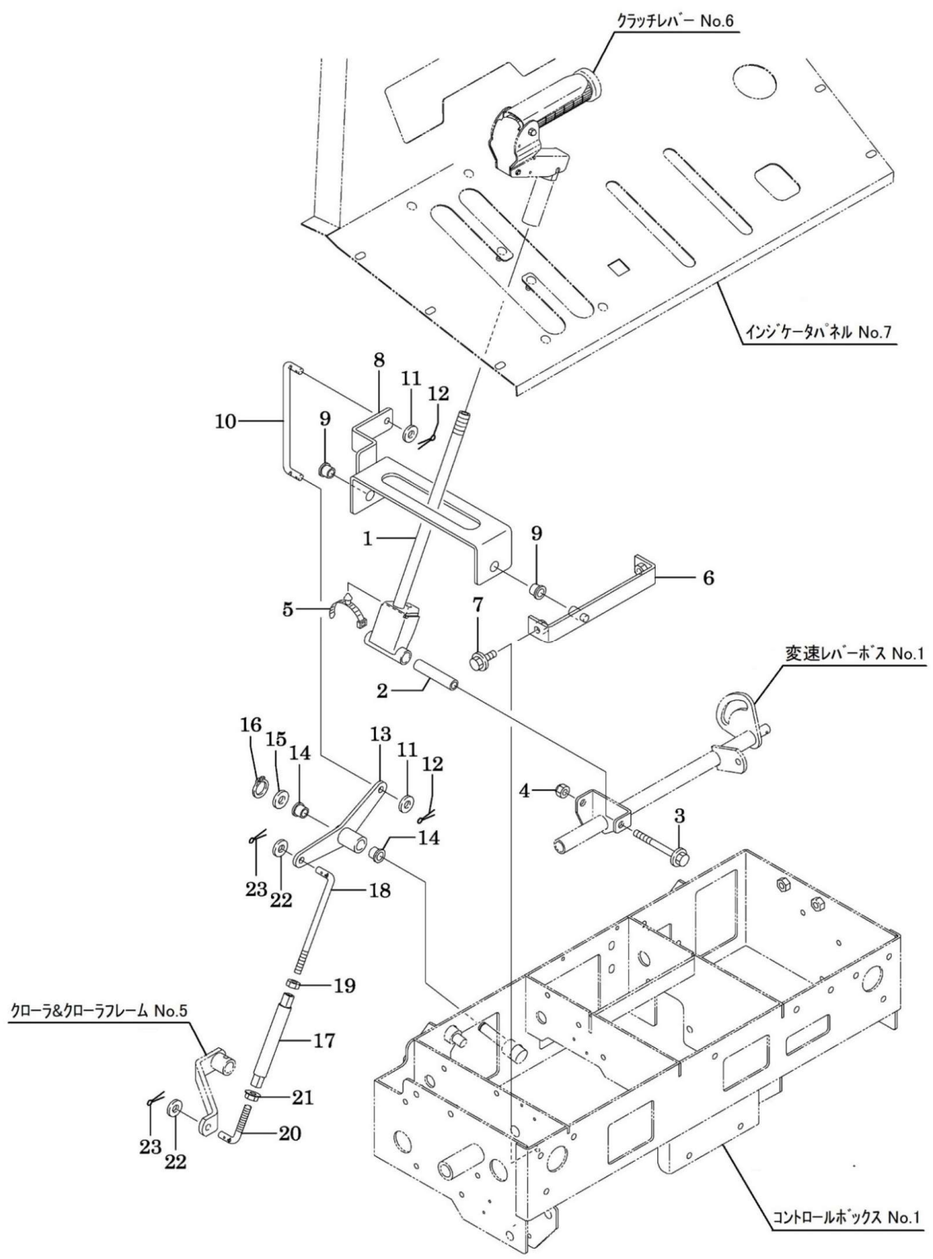

WADO CO., LTD
CHANGE LEVER SX2211E

No.	Parts No.	Name	Quantity	Note
1	75700-B56-006	LEVER COMP, CHANGE	1	
2	75903-M72-002	COLLAR, 9×63.5	1	
3	93100-0808017	BOLT, FLANGE 8×80	1	
4	91233-084120	NUT, SPECIAL 8	1	
5	91314-119P7	STRAP, CABLE 1-19P7	1	
6	72300-B56-000	BRACKET COMP, CHANGE	1	
7	93100-0801617	BOLT, FLANGE 8×16	2	
8	75600-B56-001	ARM COMP, CHANGE LEVER	1	
9	91644-121080	BUSH, 80F-1210	2	
10	75904-B56-000	ROD B, SUB CHANGE	1	
11	94101-08010	WASHER, PLAIN 8	2	
12	94210-25150	PIN, SPLIT 2.5×15	2	
13	75400-B72-001	CAM COMP, SUB CHANGE	1	
14	91644-121080	BUSH, 80F-1210	2	
15	94101-12010	WASHER, PLAIN 12	1	
16	94510-12080	CIRCLIP, EX 12	1	
17	76904-B54-001	LINK, 125	1	
18	75903-B16-001	ROD B, SUB CHANGE	1	
19	91231-0841210	NUT, SPECIAL 8	1	
20	75907-B08-001	ROD, 120	1	
21	94002-08410	NUT, FLANGE 8	1	
22	94101-08010	WASHER, PLAIN 8	2	
23	94210-25150	PIN, SPLIT 2.5×15	2	

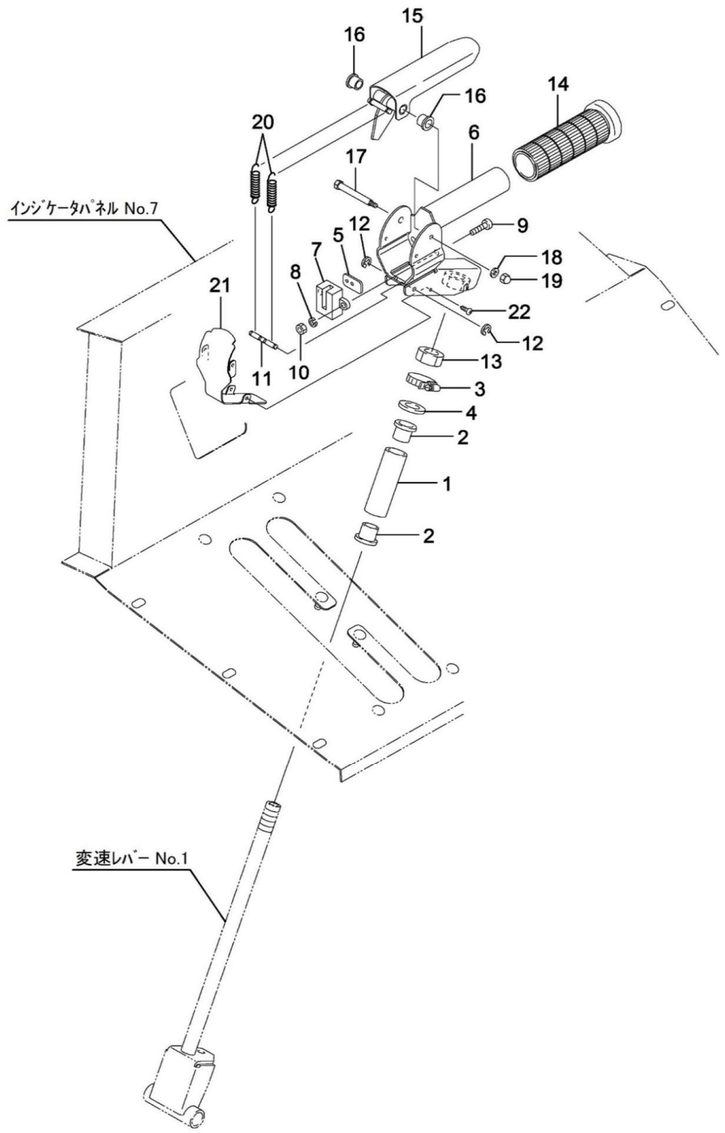

WADO CO., LTD
CLUTCH LEVER SX2211E

No.	Parts No.	Name	Quantity	Note
1	75902-B56-001	SUPPORT, PIPE	1	
2	91644-141580	BUSH, 80F-1415	2	
3	91323-015	CLAMP, HOSE 15	1	
4	94101-14010	WASHER, PLAIN 14	1	
5	73908-B56-000	BASE, SWITCH 1.2	3	
6	73700-B56-030	GRIP COMP, HST LEVER	1	
7	83300-B56-030	SWITCH, REED	1	
8	94111-03012	WASHER, SPG 3	2	
9	93500-0301614	SCREW, PAN 3×16	2	
10	94001-03412	NUT, 3	2	
11	73904-B56-000	HOLDER, SPRING	1	
12	94511-03010	E RING, 3	2	
13	94004-14412	NUT, 14×1.5	1	
14	73906-B56-000	GRIP, HANDLE 34	1	
15	73500-B56-031	LEVER COMP, HST CLUTCH	1	
16	91644-060680	BUSH, 80F-0606	2	
17	73903-B56-000	PIN, CLUTCH	1	
18	94101-04010	WASHER, PLAIN 4	1	
19	94021-04413	NUT, CAP 4	1	
20	72903-B56-001	SPRING, CLUTCH	2	
21	78500-B56-004	COVER COMP, CLUTCH	1	
22	91216-3006020	BOLT, SCREW 3×6	4	

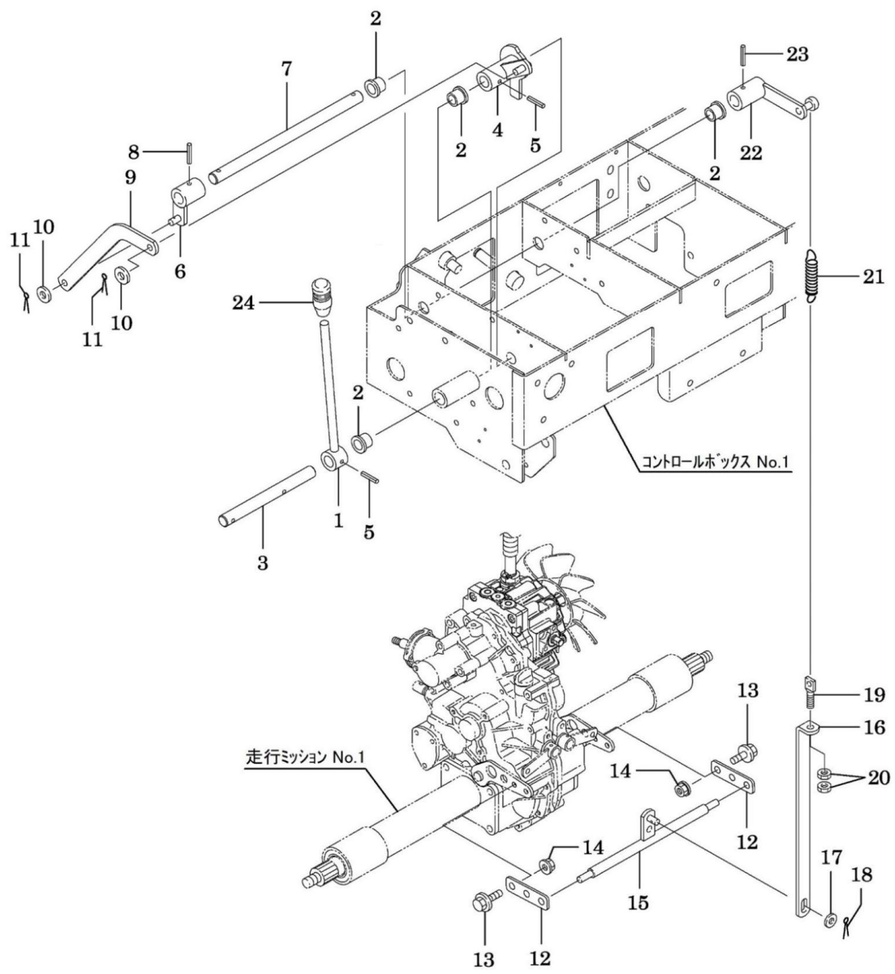

WADO CO., LTD
BRAKE LEVER SX2211E

No.	Parts No.	Name	Quantity	Note
1	76100-B78-001	LEVER COMP, PARKING BRAKE	1	
2	91644-151280	BUSH, 80F-1512	4	
3	76904-B78-000	PIN, LEVER	1	
4	76200-B78-802	BOSS COMP, PARKING BRAKE	1	
5	94319-50025	PIN, SPG 5×25	2	
6	76400-B78-000	ARM B COMP, COUNTER	1	
7	76905-B56-801	SHAFT, BRAKE COUNTER	1	
8	94319-50028	PIN, SPG 5×28	1	
9	76906-B56-000	ARM, BRAKE LINK	1	
10	94101-08010	WASHER, PLAIN 8	2	
11	94210-25150	PIN, SPLIT 2.5×15	2	
12	76903-B53-000	PLATE, BRAKE ARM	2	
13	93100-0802017	BOLT, FLANGE 8×20	2	
14	94002-08410	NUT, FLANGE 8	2	
15	76500-B53-000	PIN COMP, BRAKE	1	
16	76905-B78-000	BAR, BRAKE LINK	1	
17	94101-08010	WASHER, PLAIN 8	1	
18	94210-25150	PIN, SPLIT 2.5×15	1	
19	16904-M65-000	ROD, TENSION	1	
20	94003-08412	NUT, SPECIAL 8	2	
21	91601-B16-000	SPRING, SIDE CLUTCH	1	
22	76300-B56-000	ARM A COMP, COUNTER	1	
23	94319-50028	PIN, SPG 5×28	1	
24	76902-A91-001	GRIP, PARKING LEVER	1	

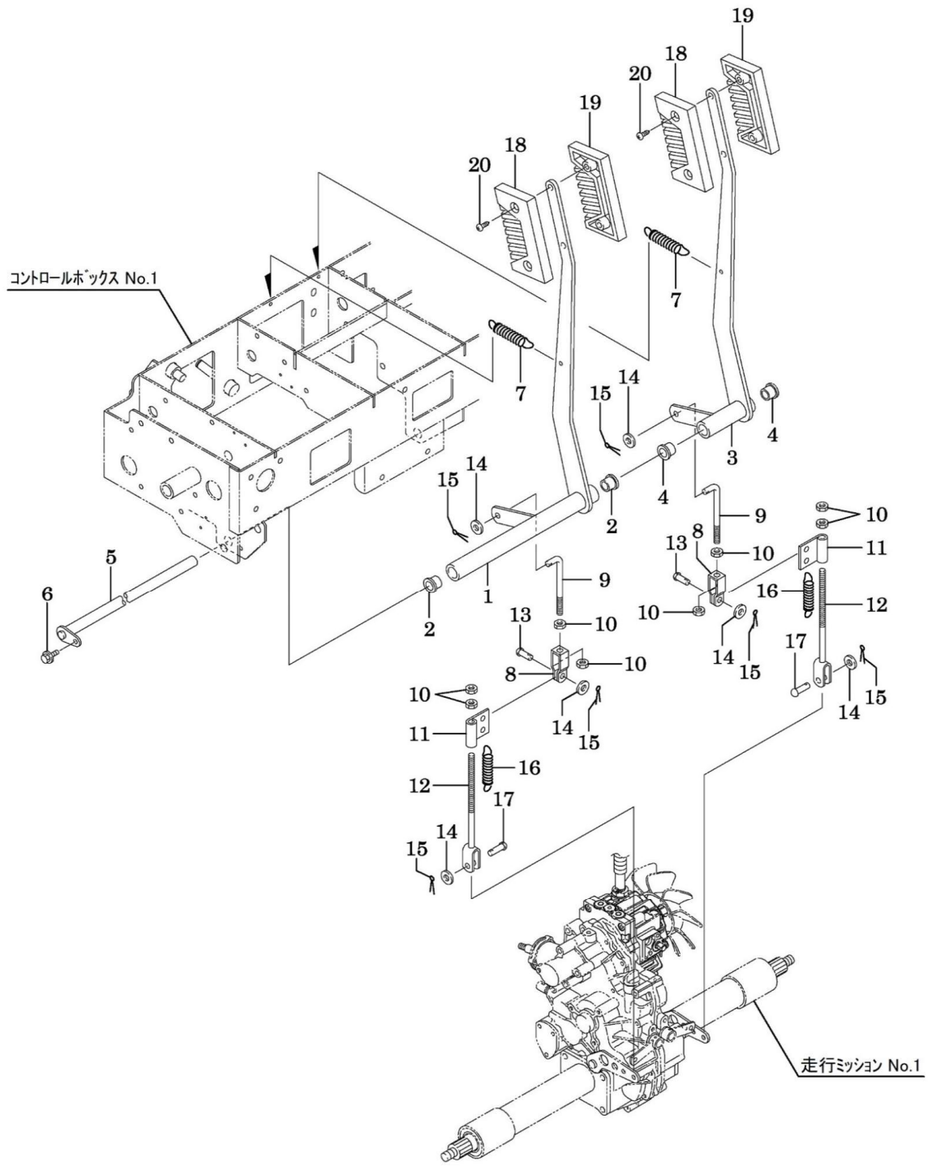

WADO CO., LTD
SIDE CLUTCH LEVER SX2211E

No.	Parts No.	Name	Quantity	Note
1	73200-B78-001	LEVER L COMP, SIDE CLUTCH	1	
2	91644-151280	BUSH, 80F-1512	2	
3	73300-B72-001	LEVER R COMP, SIDE CLUTCH	1	
4	91644-151280	BUSH, 80F-1512	2	
5	73400-B56-801	PIN 410 COMP, LEVER	1	
6	93100-0601217	BOLT, FLANGE 6×12	1	
7	91604-A38-001	SPRING, COIL 16.5×125	2	
8	73903-A91-000	JOINT A	2	
9	75905-B39-031	ROD C, SUB CHANGE	2	
10	94003-08412	NUT, SPECIAL 8	8	
11	73904-B54-000	HOLDER, SIDE CLUTCH	2	
12	76600-B53-000	ROD COMP, SIDE CLUTCH	2	
13	94330-0802210	PIN, 8×22	2	
14	94101-08010	WASHER, PLAIN 8	6	
15	94210-25150	PIN, SPLIT 2.5×15	6	
16	91601-B16-000	SPRING, SIDE CLUTCH	2	
17	94330-0802510	PIN, 8×25	2	
18	76903-B18-000	GRIP A, CLUTCH LEVER	2	
19	76904-B18-000	GRIP B, CLUTCH LEVER	2	
20	76906-A91-000	BOLT, SCREW 4×20	4	

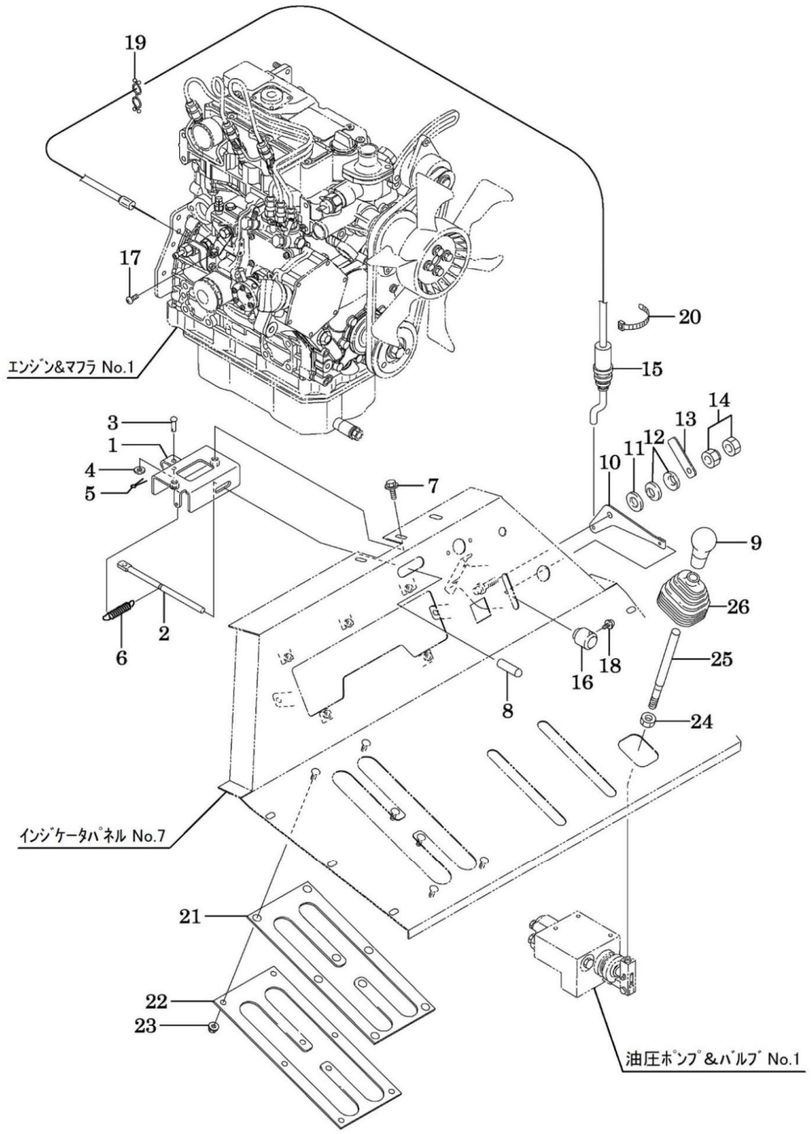

WADO CO., LTD
THROTTLE LEVER & HYDRAULIC LEVER SX2211E

No.	Parts No.	Name	Quantity	Note
1	75800-B56-000	HOLDER COMP, BONNET	1	
2	75901-B56-000	LEVER, BONNET	1	
3	94330-0602510	PIN, 6×25	1	
4	94101-06010	WASHER, PLAIN 6	1	
5	94210-20120	PIN, SPLIT 2×12	1	
6	91601-M27-001	SPRING, COIL 12.5×50	1	
7	93100-0601617	BOLT, FLANGE 6×16	2	
8	91731-0809021	GRIP, LEVER J8	1	
9	91731-1201011	GRIP, LEVER A12	1	
10	75905-B84-001	LEVER, AXLE	1	
11	94101-08015	WASHER, PLAIN 8	1	
12	91252-082	SPRING H, PLATE 8	2	
13	75906-B84-000	PLATE, THRUST	1	
14	91235-08100	NUT, HARD LOCK 8	1	
15	77200-B84-000	WIRE, AXLE	1	
16	75907-B18-000	KNOB, THROTTLE LEVER	1	
17	93500-0401014	SCREW, PAN 4×10	1	
18	75908-B18-001	SCREW, SPECIAL 4×8	1	
19	91318-20058	PURSE LOCK 2-0058	1	
20	91310-150	BAND, NYLON PRT1.5S	1	No.211000～
21	75901-B72-000	GUIDE, CHANGE LEVER	1	
22	75902-B72-001	CLAMP, LEVER GUIDE	1	
23	94002-06410	NUT, FLANGE 6	8	
24	94003-10412	NUT, SPECIAL 10	1	
25	75901-B53-000	LEVER, HYDRAULIC OPERATION	1	
26	76909-A91-000	BOOT, LEVER	1	

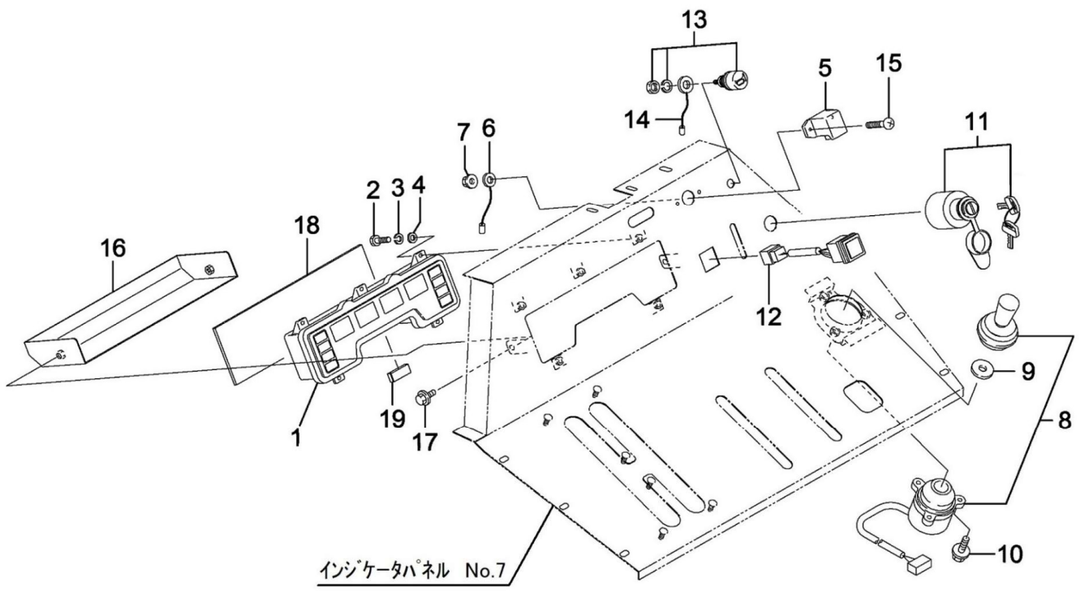

WADO CO., LTD
ELECTRICAL PARTS (INDICATOR) SX2211E

No.	Parts No.	Name	Quantity	Note
1	83100-B84-004	METER, COMBINATION	1	
2	92000-0401614	BOLT, 4×16	5	
3	94111-04012	WASHER, SPG 4	5	
4	94101-04010	WASHER, PLAIN 4	5	
5	83500-B72-000	LIGHT, LED	1	
6	87300-B18-000	CORD, EARTH	1	
7	94002-04410	NUT, FLANGE 4	2	
8	83200-B18-000	SWITCH, CONTROL	1	
9	83902-B18-000	WASHER, RD 11×32×4.5	1	
10	93100-0602017	BOLT, FLANGE 6×20	3	
11	83100-A58-000	SWITCH, KEY	1	
12	83200-B54-000	SWITCH, PUSH LIGHT	1	
13	83300-B72-001	SWITCH, HORN	1	
14	85500-B72-000	EARTH, PANEL	1	
15	93500-0401614	SCREW, PAN 4×16	2	
16	88100-B84-000	COVER COMP, METER	1	
17	93100-0601017	BOLT, FLANGE 6×10	2	
18	88901-B84-000	SPONGE, 90×298	1	
19	88902-B84-000	SHUTTER, COUPLER	1	

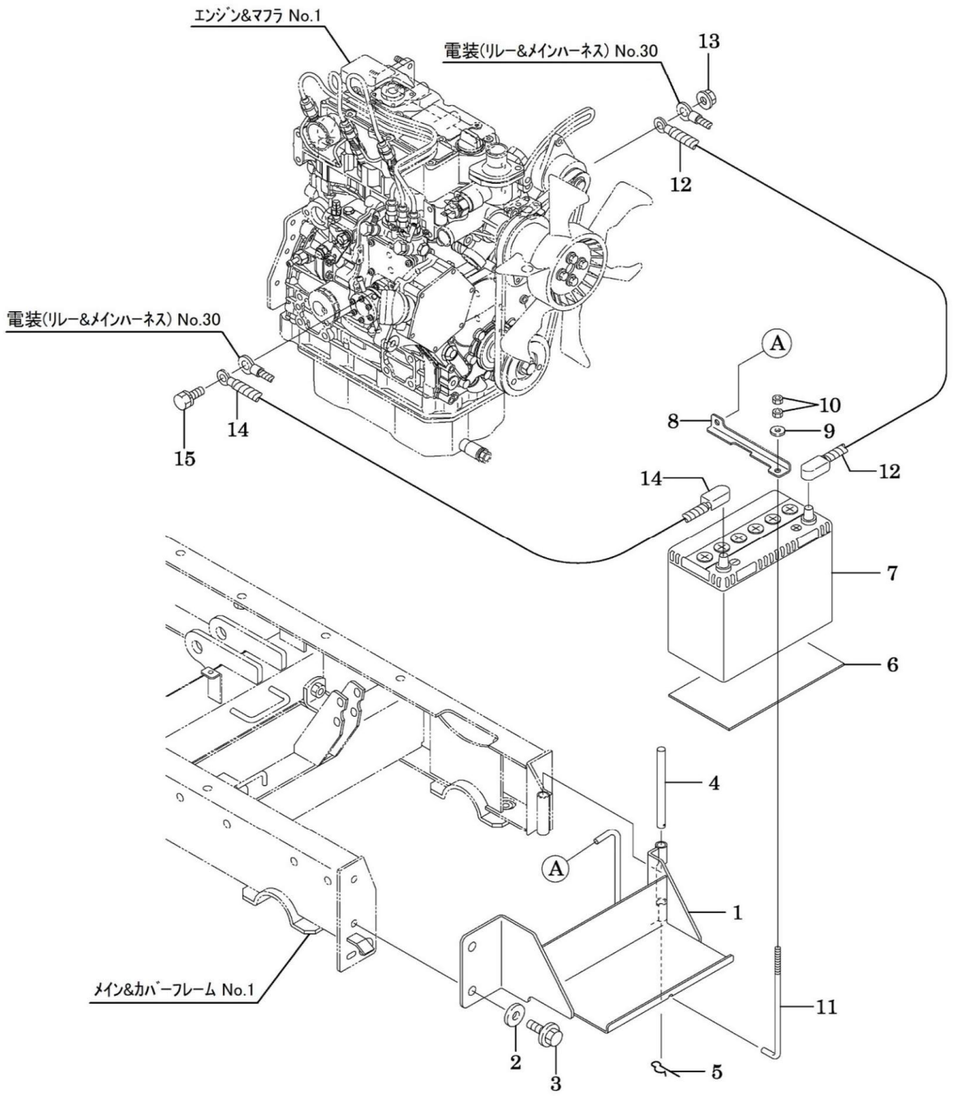

WADO CO., LTD
BATTERY SX2211E

No.	Parts No.	Name	Quantity	Note
1	41800-B78-000	BASE COMP, BATTERY	1	
2	94101-10015	WASHER, PLAIN 10	2	
3	93300-1002517	BOLT, FLANGE 10×1.25×25	2	
4	91262-121400	PIN, PRESS 12×140	1	
5	94251-120111	PIN A, SNAP A12×2.6	1	
6	89901-A91-000	RUBBER, ANTIVIBRATION	1	
7	91890-055B24R	BATTERY, 55B24L	1	
8	86901-B54-001	CLAMP, BATTERY	1	
9	94101-06015	WASHER, PLAIN 6	1	
10	94001-06412	NUT, 6	2	
11	86901-A20-001	BOLT, BATTERY SET	1	
12	87100-B16-031	CORD (+), BATTERY	1	
13	94002-08410	NUT, FLANGE 8	1	
14	87200-B84-000	CORD (-), BATTERY 1050	1	
15	93000-1002517	BOLT, SPECIAL 10×25	1	～year2024
	93000-1002017	BOLT, SPECIAL 10×20(7T	1	year2025～

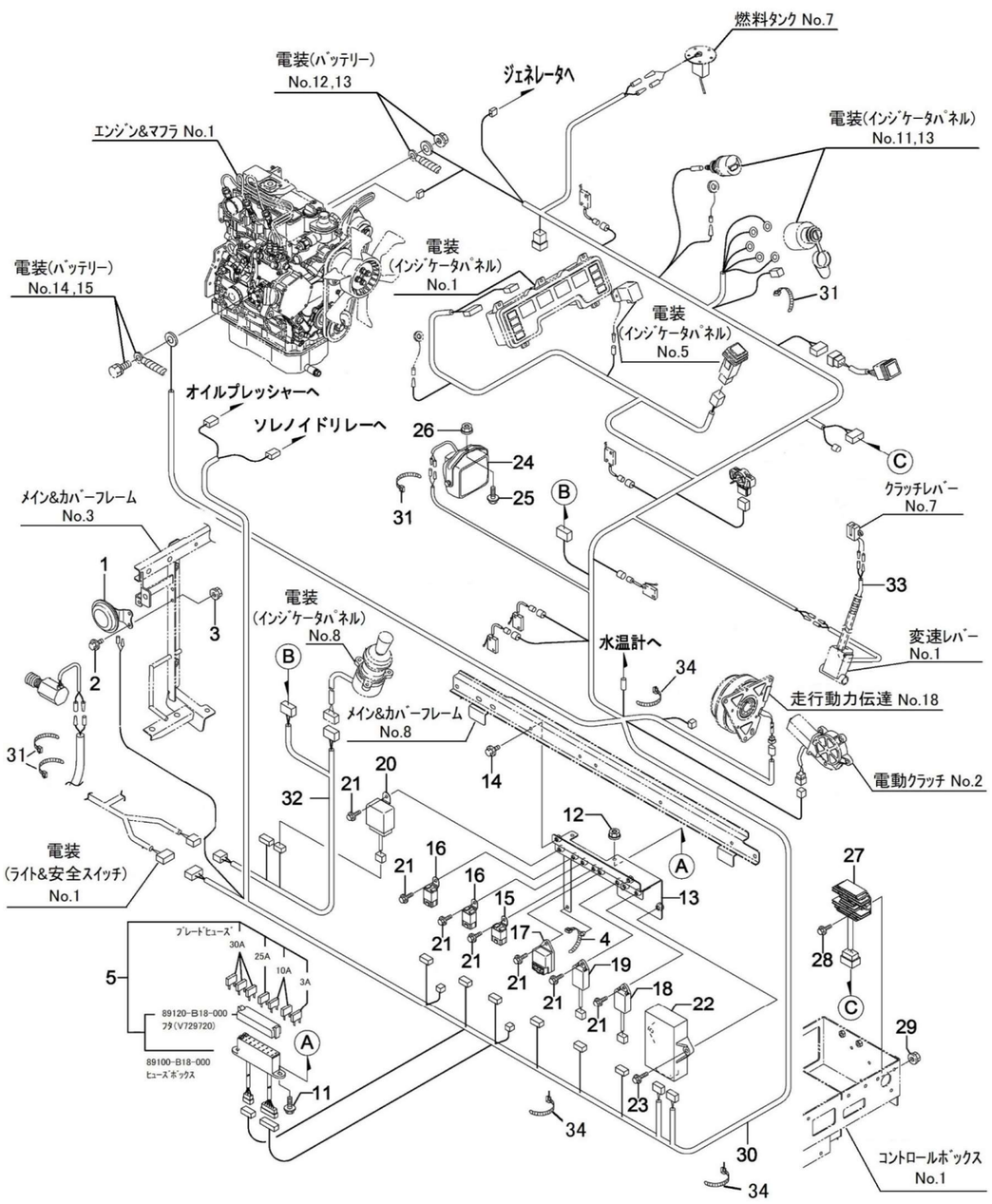

WADO CO., LTD
RELAY & MAIN HARNESS SX2211E

No.	Parts No.	Name	Quantity	Note
1	83400-B72-000	BUZZER	1	
2	93100-0601617	BOLT, FLANGE 6×16	2	
3	94002-06410	NUT, FLANGE 6	2	
4	91314-11W02	STRAP, CABLE 1-1W02	1	
5	80001-B85-000	BOX ASSY, FUSE	1	
11	93100-0601617	BOLT, FLANGE 6×16	2	
12	94002-06410	NUT, FLANGE 6	2	
13	82300-B85-000	BRACKET COMP, RELAY	1	
14	93100-0601217	BOLT, FLANGE 6×12	2	
15	84100-B32-001	RELAY, C	1	
16	84500-B18-001	RELAY, NO	2	
17	119650-77911	RELAY COMP, GLOW	1	
18	129155-77925	RELAY, TIMER (4S)	1	
19	129211-77920	RELAY, TIMER (1 SEC)	1	
20	84200-B18-001	RELAY, CHUTE	1	
21	93100-0601217	BOLT, FLANGE 6×12	8	
22	84100-B85-004	ECU	1	
23	93100-0802517	BOLT, FLANGE 8×25	2	
24	83100-G18-000	LAMP, 18W	1	
25	93100-0801617	BOLT, FLANGE 8×16	1	
26	94002-08410	NUT, FLANGE 8	1	
27	119225-77721	CURRENT LIMITER 20A	1	
28	93100-0602517	BOLT, FLANGE 6×25	2	
29	94002-06410	NUT, FLANGE 6	2	
30	85100-B85-033	HARNESS, MAIN	1	
31	91311-140	BAND, REPEAT RF140	4	
32	85200-B85-000	HARNESS, CHUTE	1	
33	85600-B56-030	HARNESS, REED SWITCH	1	
34	91311-250	BAND, REPEAT RF250	3	

WADO CO., LTD

LIGHT & GUARD SWITCH SX2211E

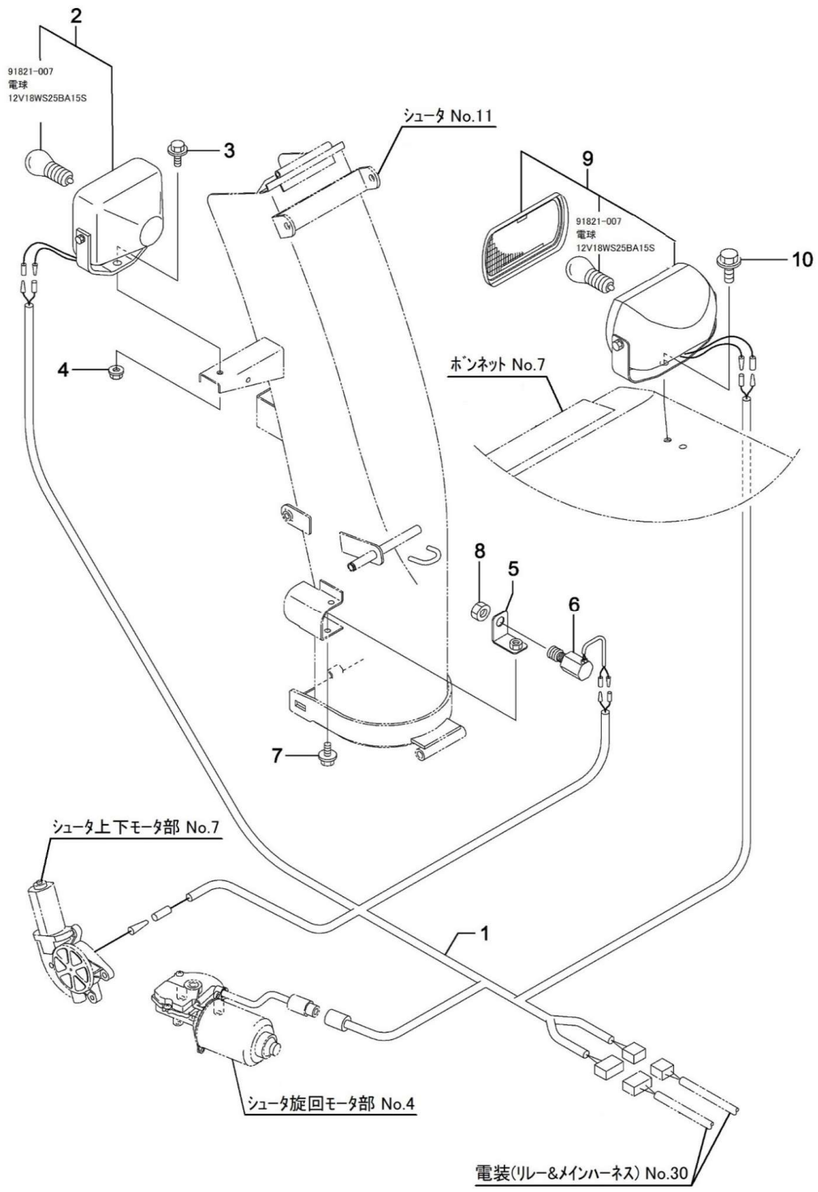

WADO CO., LTD

LIGHT & GUARD SWITCH SX2211E

No.	Parts No.	Name	Quantity	Note
1	85400-B72-030	HARNESS, CHUTE LIGHT	1	
2	83100-G18-000	LAMP, 18W	1	
3	93100-0801617	BOLT, FLANGE 8×16	1	
4	94002-08410	NUT, FLANGE 8	1	
5	81200-A90-003	BRACKET COMP, CHUTE SWITCH	1	
6	83100-A65-000	SWITCH, GUARD	1	
7	93100-0801217	BOLT, FLANGE 8×12	1	
8	94005-12412	NUT, SPECIAL 12×1.25	1	
9	91820-0181003	LIGHT, 18W	1	
10	93300-1002017	BOLT, FLANGE 10×1.25×20	1	

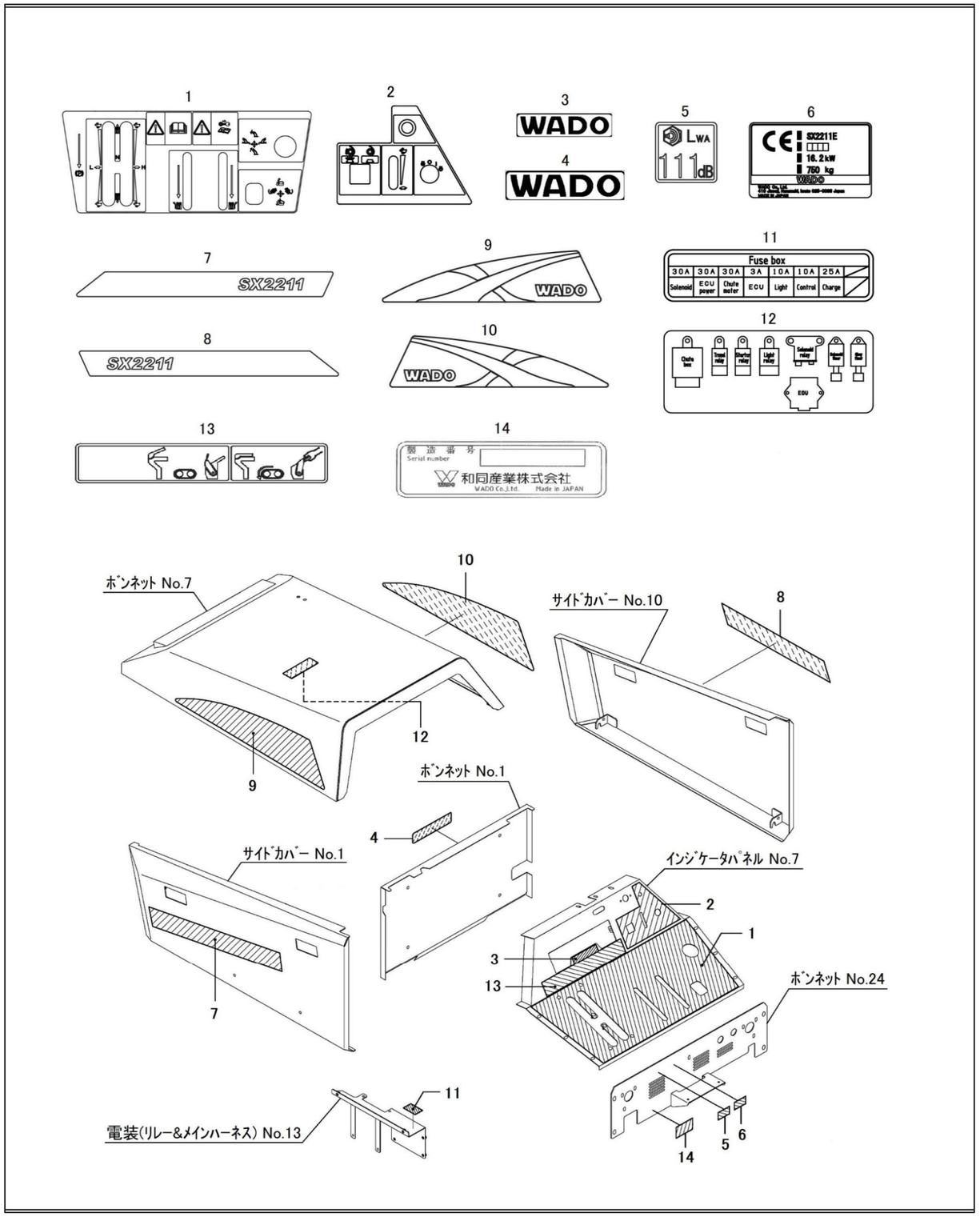

WADO CO., LTD
LABEL SX2211E

No.	Parts No.	Name	Quantity	Note
1	79901-B86-000	MARK, PANEL	1	
2	79902-B86-000	MARK, INDICATOR PANEL	1	
3	91830-A26-000	MARK A, WADO	1	
4	91831-A26-000	MARK B, WADO	1	
5	79909-B86-000	MARK, NOISE（111dB）	1	
6	79910-B86-000	MARK, CE	1	
7	79914-B86-000	MARK L, SIDE	1	
8	79915-B86-000	MARK R, SIDE	1	
9	79910-B79-000	MARK L, BONNET	1	
10	79911-B79-000	MARK R, BONNET	1	
11	79908-B86-000	MARK, FUSE	1	
12	79907-B86-000	MARK, RELAY	1	
13	79926-B99-000	MARK, CLUTCH	1	
14	91907-001	NAMEPLATE	1	

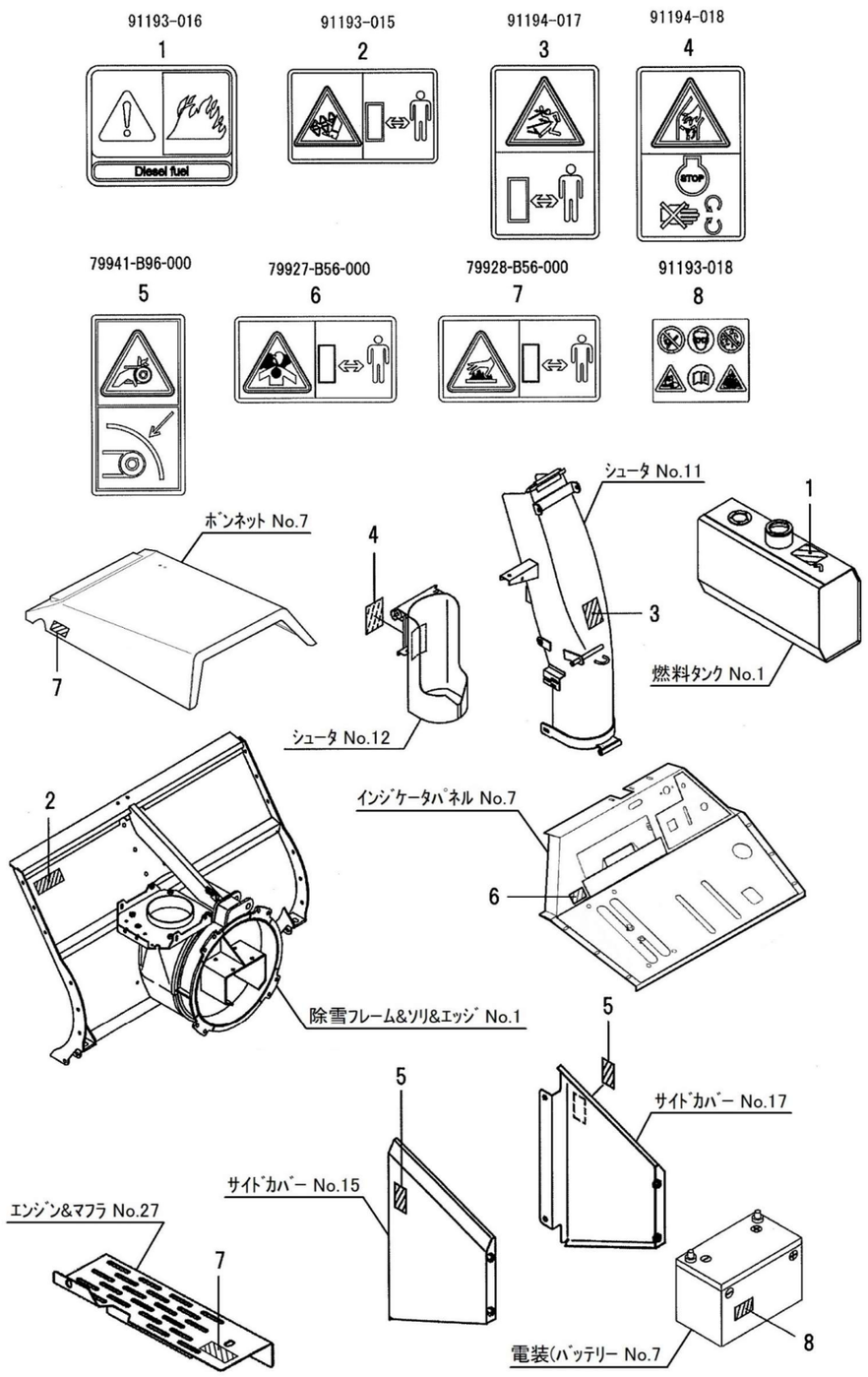

WADO CO., LTD
PL LABEL SX2211E

No.	Parts No.	Name	Quantity	Note
1	91193-016	LABEL, FUEL WARNING	1	
2	91193-015	LABEL, AUGER DANGER	1	
3	91194-017	LABEL, DISCHARGE WARNING	1	
4	91194-018	LABEL, BLOWER WARNING	1	
5	79941-B96-000	LABEL, BELT COVER CAUTION	2	
6	79927-B56-001	LABEL, EXHAUST GAS WARNING	1	～No.207524
	91194-019	LABEL, EXHAUST GAS WARNING	1	No.207525～
7	79928-B56-000	LABEL, MUFLLER CAUTION	2	
8	91193-018	LABEL, BATTERY DANGER	1	
9	91193-020	LABEL, CLUTCH DANGER	1	No.207525～

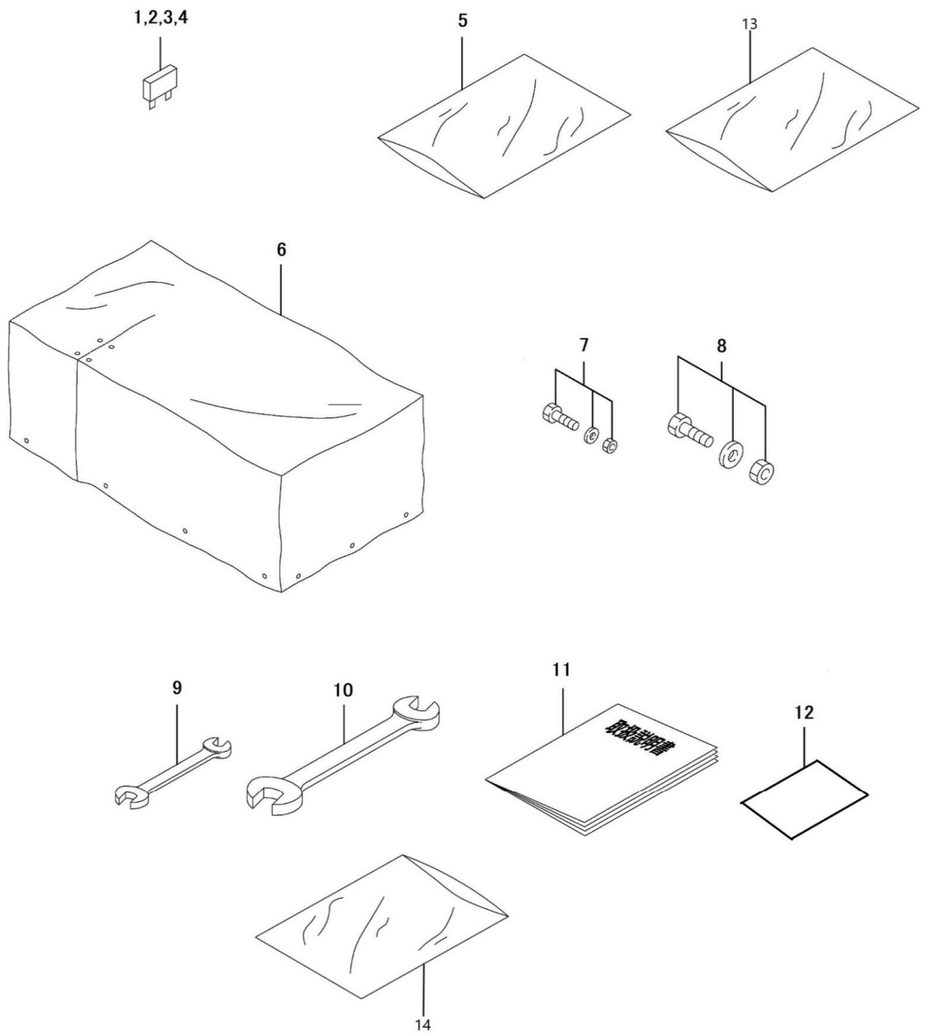

WADO CO., LTD
ACCESSORY SX2211E

No.	Parts No.	Name	Quantity	Note
1	91811-103	FUSE 3A, BLADE	1	
2	91811-110	FUSE, BLADE 10A	1	
3	91811-125	FUSE, BLADE 25A	1	
4	91811-130	FUSE, BLADE 30A	1	
5	91998-070811	BAG, POLY 0.07×80×110	1	
6	98100-B18-000	COVER, SEAT	1	
7	90001-B16-000	BOLT ASSY, SHEAR 8×25	1	
8	90002-B18-000	BOLT ASSY, SHEAR 10×30	1	
9	91904-B16-000	WRENCH 13, COMBINATION	1	
10	91905-B16-000	WRENCH 17, COMBINATION	1	
11	91906-B86-000	INSTRUCTION MANUAL	1	～No.207524
	91906-B86-050	INSTRUCTION MANUAL	1	No.207525～
12	91903-001	-	1	
13	91998-071523	BAG 0.07×80×230, PLASTIC	1	
14	91997-0240325	BAG 240×325, PLASTIC	1	