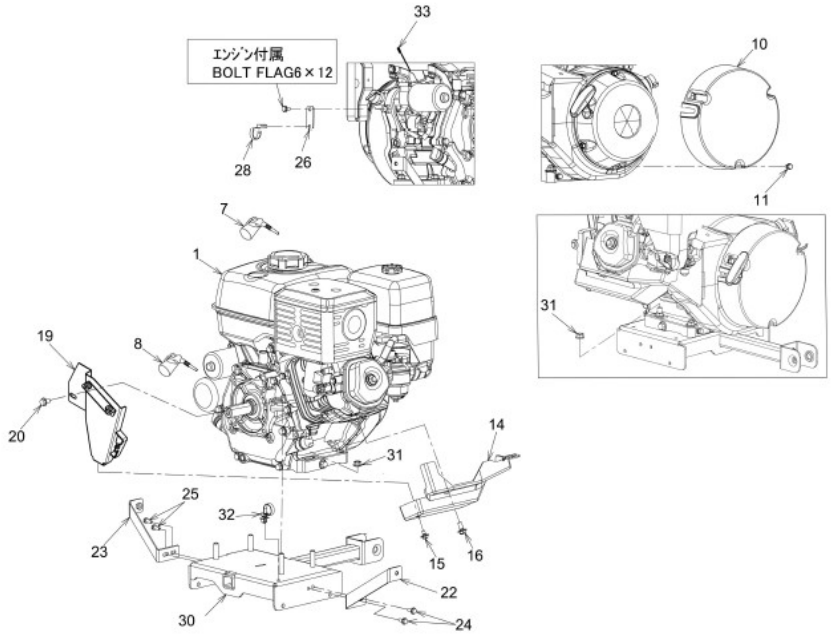

WADO CO., LTD
00.ENGINE SXC1070HE

No.	Parts No.	Name	Quantity	Note
1	01007-B96-030	ENGINE GX390T2 SWD4	1	
10	02901-B96-030	COVER, RECOIL	1	
11	48911-B96-001	BOLT, SPECIAL 6×9S	3	
14	02902-B96-000	COVER A, ENGINE	1	
15	48905-B96-000	BOLT, SPECIAL 6×9	1	
16	48912-B96-000	BOLT, SPECIAL 8×14	1	
17	-	#N/A		
19	09300-B96-000	COVER B COMP, ENGINE	1	
20	93100-0801617	BOLT, FLANGE 8×16	1	
22	02700-B96-801	BRACKET L COMP, COVER	1	
23	-	#N/A		
24	93100-0601617	BOLT, FLANGE 6×16	2	
25	-	#N/A		
26	08905-B96-800	BRACKET, HARNESS	1	
28	91314-11765	STRAP, CABLE 1-1765	2	
30	02200-BA2-800	BASE COMP, ENGINE (1070	1	
31	94006-10410	NUT, FLANGE 10×1.25	5	
32	91314-119P7	STRAP, CABLE 1-19P7	2	
33	91382-0701701	TUBE, CORRUGATE 7×170	1	

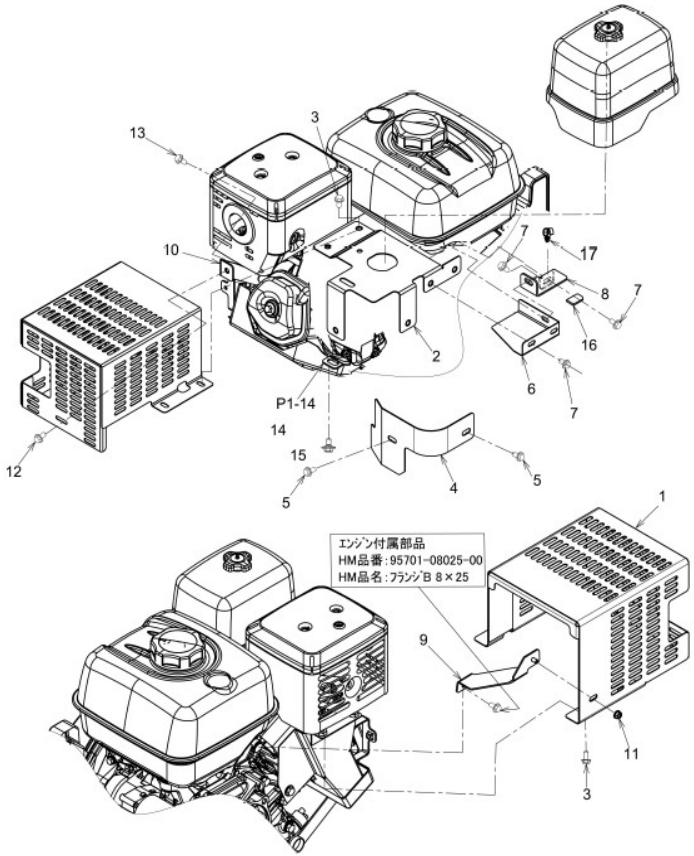

WADO CO., LTD
01.ENGINE COVER, MUFFLER COVER SXC1070HE

No.	Parts No.	Name	Quantity	Note
1	04100-B96-001	COVER COMP, MUFFLER	1	
2	04200-B96-800	BASE COMP, ENGINE COVER	1	
3	93100-0601217	BOLT, FLANGE 6×12	4	
4	04902-B96-801	COVER, AIR CLEANER	1	
5	93100-0601017	BOLT, FLANGE 6×10	2	
6	04600-B96-800	COVER COMP, LOWER	1	
7	93100-0601217	BOLT, FLANGE 6×12	4	
8	05902-BA3-801	BRACKET, JOINT	1	
9	04400-B96-800	BRACKET A COMP, MUFFLER COVER	1	
10	04500-B96-801	BRACKET B COMP, MUFFLER COVER	1	
11	94002-06410	NUT, FLANGE 6	1	
12	93100-0601217	BOLT, FLANGE 6×12	1	
14	48913-B96-000	BOLT, SPECIAL 6×9L	1	
16	-	#N/A		
17	91315-A3455	CLIP, CABLE A-3455	1	
18	05600-BA3-800	PLATE COMP, ADJUSTMENT	1	
19	93100-0601217	BOLT, FLANGE 6×12	1	

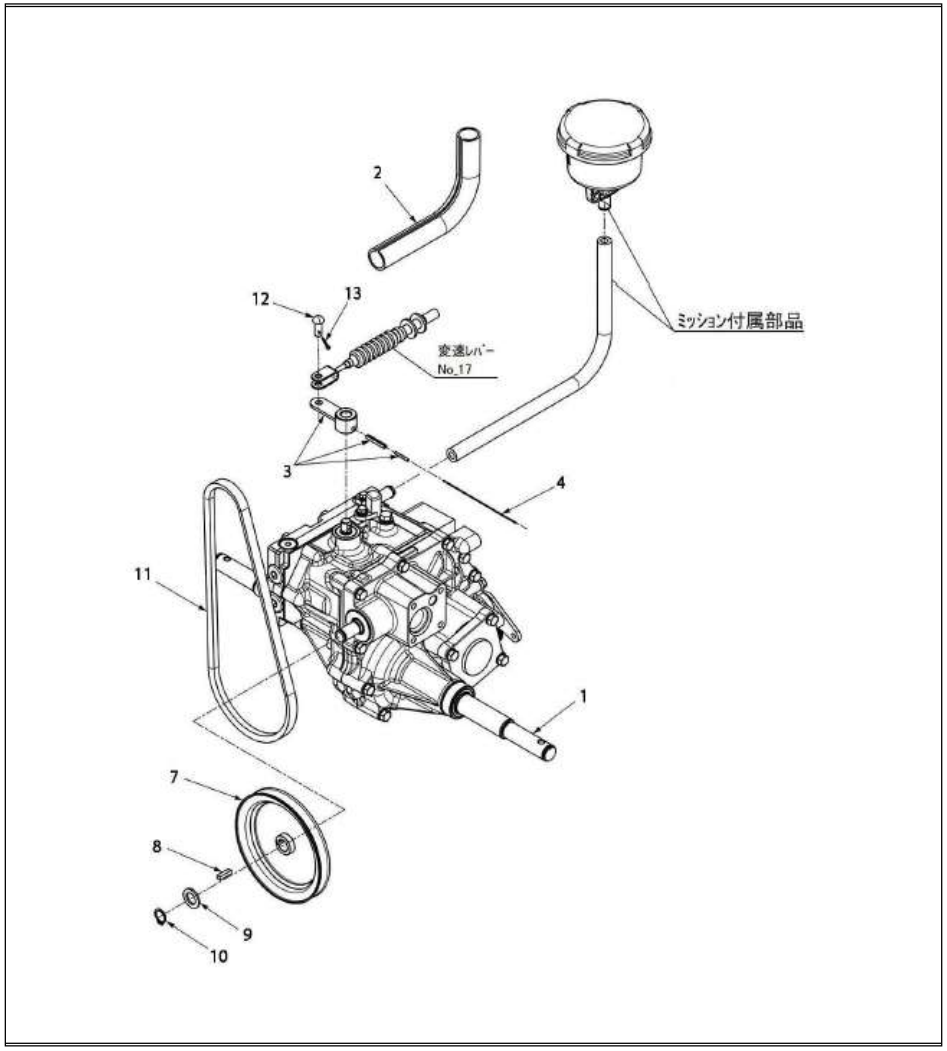

WADO CO., LTD
10.TRANSMISSION SXC1070HE

No.	Parts No.	Name	Quantity	Note
1	10001-B90-031	TRANSMISSION, SB-10SCS	1	
2	91382-2204001	TUBE, CORRUGATE, 22×400	1	
3	10002-B90-000	LEVER KIT, HST	1	
4	75913-B18-000	WIRE, SPECIAL 1.2×100	1	
6	-	#N/A		
7	63200-B96-001	PULLEY COMP, HST	1	
8	97112-020141	KEY, 5×5×20SR	1	
9	91251-1525231	WASHER, RD 15×25×2.3	1	
10	94510-15080	CIRCLIP, EX 15	1	
11	63901-B96-000	BELT SA33, RED S II	1	
12	94330-0802510	PIN, 8×25	1	
13	94210-25150	PIN, SPLIT 2.5×15	1	

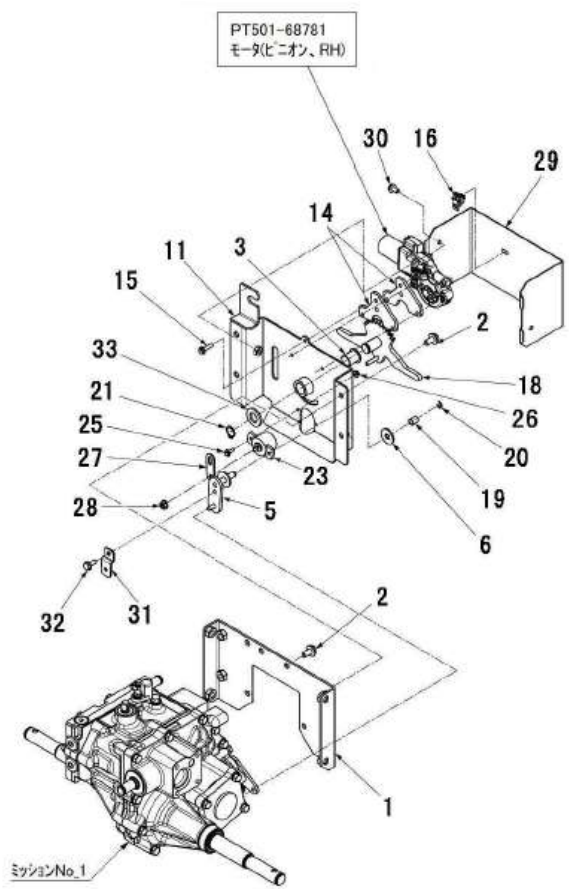

WADO CO., LTD
11.SIDE CLUTCH SXC1070HE

No.	Parts No.	Name	Quantity	Note
1	12100-BA2-800	BASE COMP, TRANSMISSION	1	
2	93100-0801617	BOLT, FLANGE 8×16	9	
3	91644-162080	BUSH, 80F-1620	1	
4	-	#N/A		
5	12400-BA2-802	ARM COMP, BRAKE	2	
6	91251-0835231	WASHER, RD 8×35×2.3	2	
7	-	#N/A		
8	-	#N/A		
9	-	#N/A		
11	12300-BA2-802	BRACKET COMP, MOTOR	1	
12	-	#N/A		
14	33909-B96-802	SPACER B	2	
15	91274-0502011	BOLT, SPECIAL 5×20	3	
16	81901-BA2-000	CLIP, COUPLER WPC	1	
18	12600-BA2-800	GEAR COMP	1	
19	12901-BA2-000	COLLAR 8.2×10×12	2	
20	94511-06080	RING, E 6	2	
21	94510-16080	CIRCLIP, EX 16	1	
23	83100-B89-001	SENSOR, ANGLE RPA211	1	
24	-	#N/A		
25	-	#N/A		
25	83902-B89-000	BOLT, SPECIAL 4×12	2	
26	94002-04410	NUT, FLANGE 4	2	
27	89301-BA2-800	BRACKET, SIDE CLUTCH	1	
28	94002-06410	NUT, FLANGE 6	1	
29	18901-BA2-801	COVER, SIDE CLUTCH	1	
30	93100-0601217	BOLT, FLANGE 6×12	2	
31	12902-BA2-801	PLATE, STOPPER	2	
32	93100-0601617	BOLT, FLANGE 6×16	2	
33	94101-16010	WASHER, PLAIN 16	1	

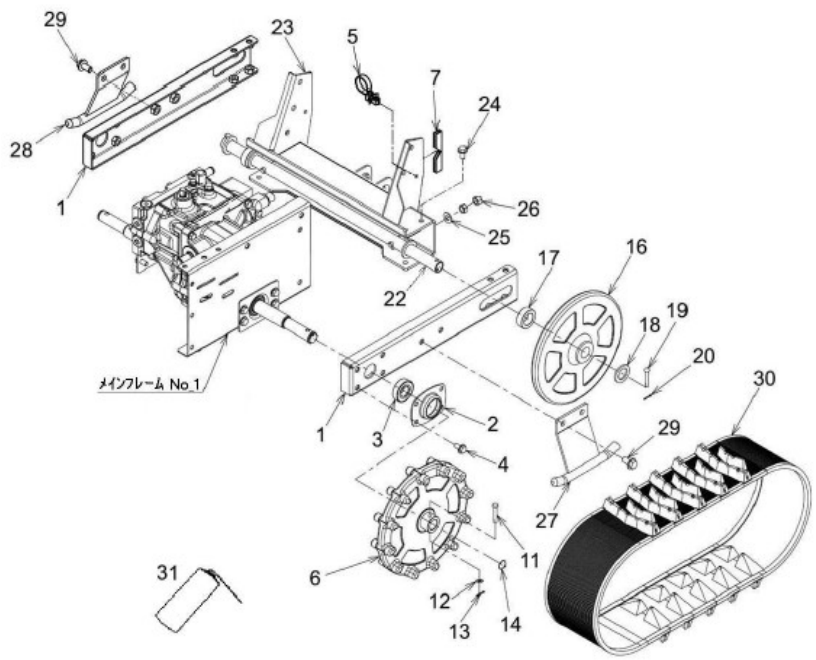

WADO CO., LTD
20.CRAWLER SXC1070HE

No.	Parts No.	Name	Quantity	Note
1	21100-B96-803	FRAME COMP, CRAWLER	2	
2	22902-B96-000	CASE, BEARING 6004	2	
3	96105-06004	BEARING, 6004UU	2	
4	93100-0801617	BOLT, FLANGE 8×16	8	
5	-	#N/A		
6	22600-B96-002	SPROCKET COMP, CRAWLER	2	
7	71901-BA2-000	PROTECTOR, RUBBER 12×70	1	
11	26901-B96-002	PIN, DRIVE	2	
12	94101-06010	WASHER, PLAIN 6	2	
13	94210-20120	PIN, SPLIT 2×12	2	
14	94510-20080	CIRCLIP, EX 20	2	
16	22901-B96-001	WHEEL, DRIVEN	2	
17	22905-B96-800	COLLAR, 24×13	2	
18	91251-2235321	WASHER, RD 22×35×3.2	2	
19	94330-0603510	PIN, 6×35	2	
20	94210-20120	PIN, SPLIT 2×12	2	
22	21400-B96-830	SHAFT COMP, REAR	1	
23	21500-B96-633	FRAME COMP, REAR	1	
24	93100-0801617	BOLT, FLANGE 8×16	8	
25	94101-10010	WASHER, PLAIN 10	2	
26	94005-10412	NUT, SPECIAL 10×1.25	4	
27	22100-B96-800	GUIDE L COMP, CRAWLER	1	
28	22200-B96-800	GUIDE R COMP, CRAWLER	1	
29	93300-1002017	BOLT, FLANGE 10×1.25×20	4	
30	L6161-26151	CRAWLER(130-59×23)	2	
31	91972-03	#N/A	3	

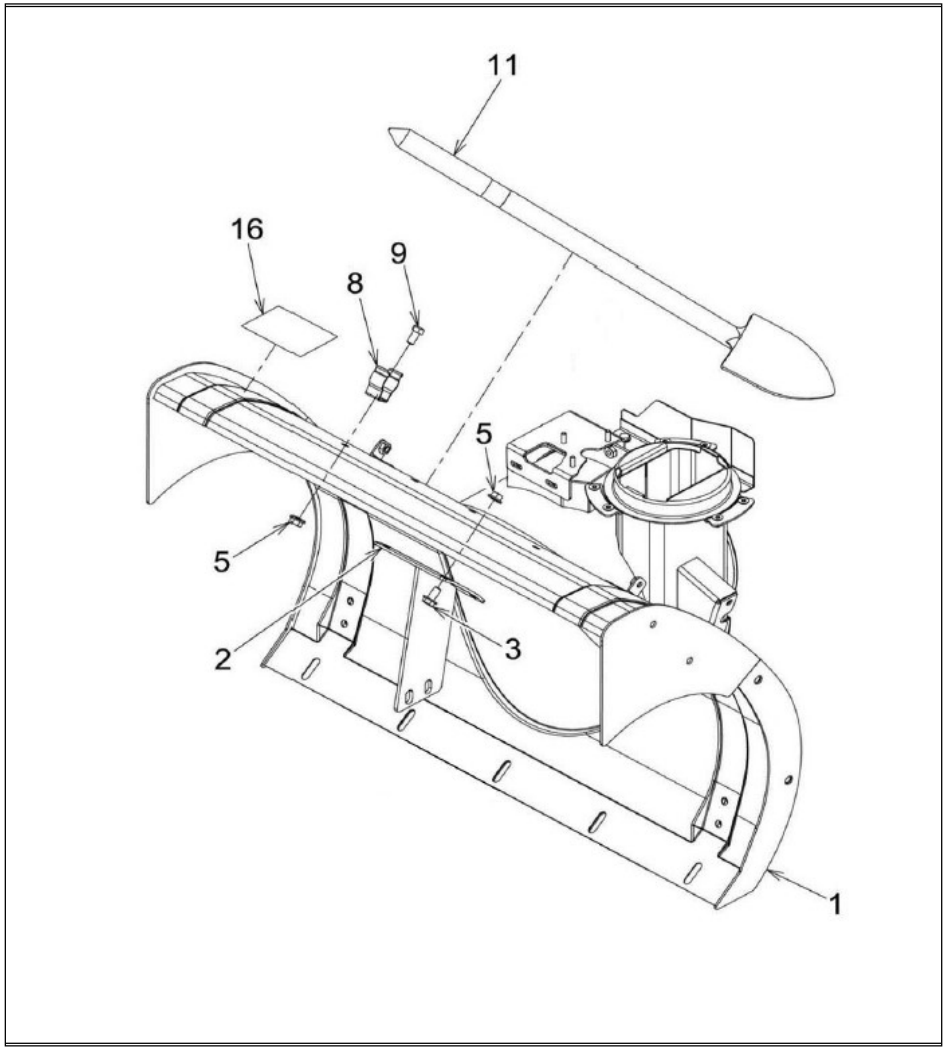

WADO CO., LTD
30.AUGER HOUSING SXC1070HE

No.	Parts No.	Name	Quantity	Note
1	32500-B96-002	HOUSING COMP, AUGER （1070E	1	
2	31200-B96-801	SUPPORT COMP, AUGER GEAR CASE	1	
3	93100-0801617	BOLT, FLANGE 8×16	4	
5	94002-08410	NUT, FLANGE 8	6	
8	39902-A65-001	HOLDER, BAR	2	
9	92200-0801617	BOLT, 8×16	2	
11	39901-B51-001	BAR, SNOW CLEANING	1	
16	91193-015	LABEL, AUGER DANGER	1	

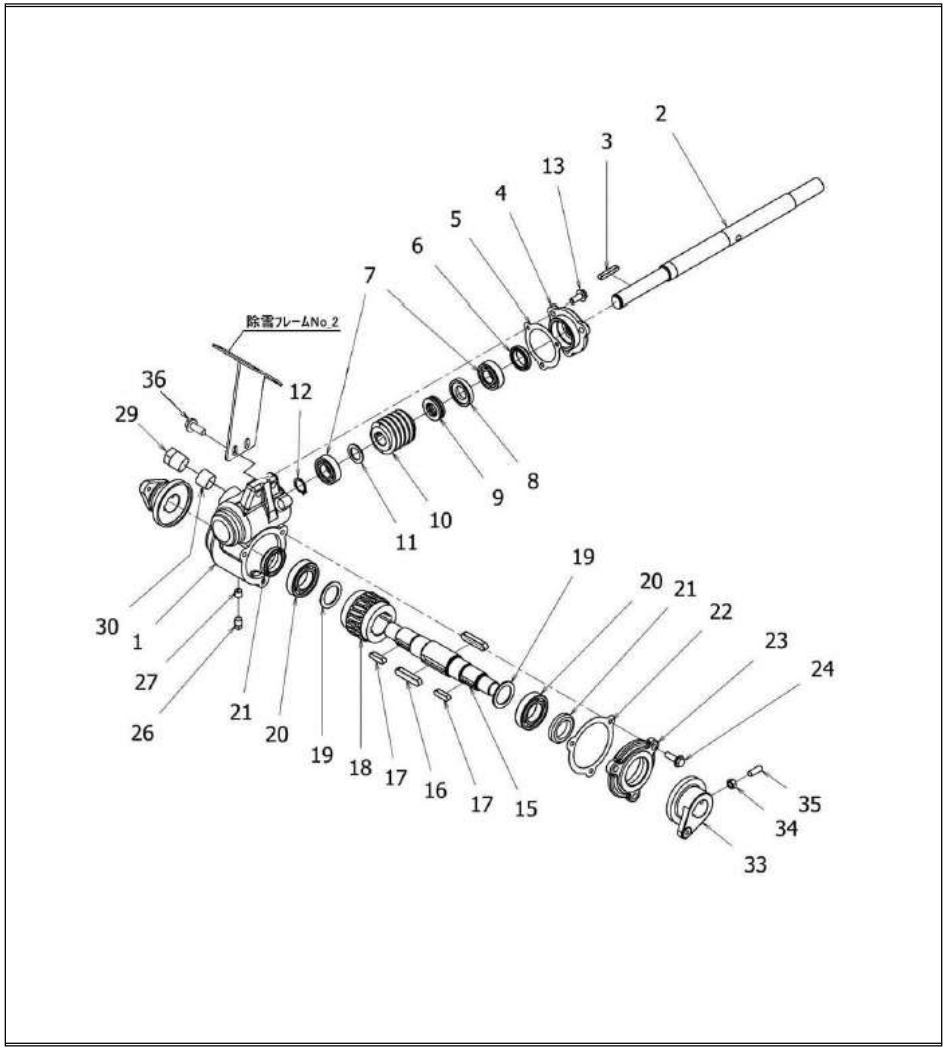

WADO CO., LTD
31.GEAR CASE SXC1070HE

No.	Parts No.	Name	Quantity	Note
1	34901-B01-700	CASE, AUGER GEAR	1	
2	34901-B96-700	SHAFT, BLOWER	1	
3	97113-038241	KEY, 6×6×38RR	1	
4	31904-A31-701	COVER A, AUGER GEAR CASE	1	
5	39901-A31-002	PACKING A, AUGER GEAR CASE	1	
6	98251-2503807	SEAL, OIL D25387	1	
7	96100-06004	BEARING, 6004	2	
8	32904-A31-001	COLLAR, THRUST	1	
9	96200-051104	BEARING, THRUST 51104	1	
10	73251-V15-F002	GEAR, DRIVE	1	
11	91912-A05-001	WASHER, RD 20×30×2	1	
12	94510-20080	CIRCLIP, EX 20	1	
13	93100-0802017	BOLT, FLANGE 8×20	3	
15	34902-B96-000	SHAFT, AUGER	1	
16	97116-048241	KEY, 10×8×48RR	2	
17	97115-028241	KEY, 8×7×28RR	2	
18	32902-A90-000	WORM WHEEL, M3×20	1	
19	91302-A31-000	WASHER, RD 30×42×2	2	
20	96100-06006	BEARING, 6006	2	
21	98251-3004508	SEAL, OIL D30458	2	
22	39902-A31-002	PACKING B, AUGER GEAR CASE	1	
23	31905-A31-700	COVER B, AUGER GEAR CASE	1	
24	93100-0802517	BOLT, FLANGE 8×25	3	
26	91555-0141	PLUG, PT1/8	1	
27	91941-050	TAPE, SEAL 50	1	
29	91555-0641	PLUG, PT3/4	1	
30	91941-150	TAPE, SEAL 150	1	
33	35901-B96-800	SHEAR FLANGE ,AUGER	2	
34	94003-08412	NUT, 8	2	
35	91221-082540	BOLT, SPECIAL 8×25	2	
36	93300-1002517	BOLT, FLANGE 10×1.25×25	2	

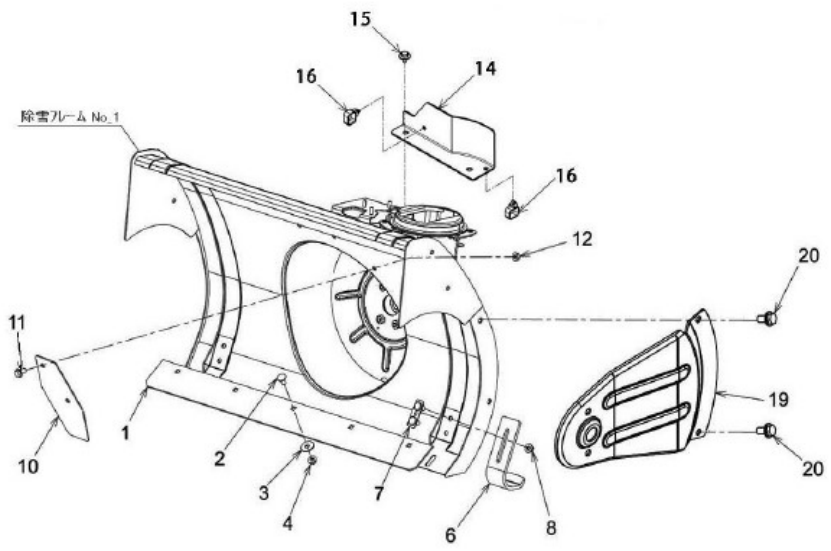

WADO CO., LTD
32.EDGE SXC1070HE

No.	Parts No.	Name	Quantity	Note
1	31903-B96-801	EDGE	1	
2	92600-0801614	BOLT, SPECIAL8×16	5	
3	94101-08015	WASHER, PLAIN 8	5	
4	94002-08410	NUT, FLANGE 8	5	
6	31906-B96-800	SKID	2	
7	31300-B96-800	BOLT COMP, SKID	2	
8	94002-08410	NUT, FLANGE 8	4	
10	31909-B96-801	PLATE	1	
11	93100-0801617	BOLT, FLANGE 8×16	2	
12	94002-08410	NUT, FLANGE 8	2	
14	65901-BA2-000	COVER, BELT	1	
15	48905-B96-000	BOLT, SPECIAL 6×9	2	
16	91315-C1J77	CLIP, CABLE C-1J77	2	
19	31902-B96-000	SUPPORT, AUGER SIDE	2	
20	93100-0801617	BOLT, FLANGE 8×16	4	

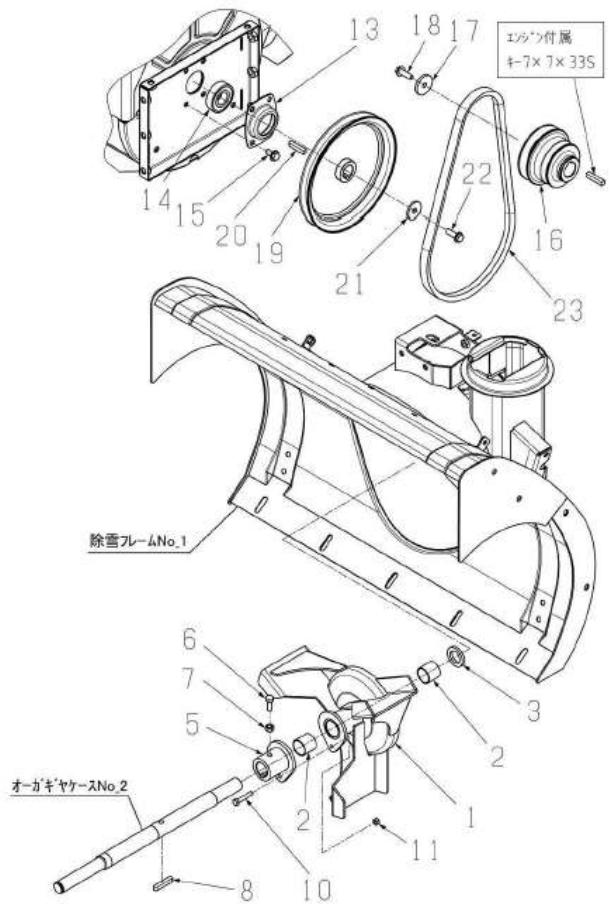

WADO CO., LTD
33.BLOWER SXC1070HE

No.	Parts No.	Name	Quantity	Note
1	36100-B96-801	BLOWER COMP	1	
2	91646-2525R	BUSH, BM2525FS	2	
3	91251-2235451	WASHER, RD 22×35×4.5	1	
5	36300-B96-802	FLANGE COMP, BLOWER SHEAR	1	
6	91212-0820147	BOLT, SPECIAL 8×20	1	
7	94003-08412	NUT, 8	1	
8	97114-040241	KEY, 7×7×40RR	1	
10	92000-0602517	BOLT 6×25	1	
11	91234-064110	NUT, TOUGH LOCK 6	1	
13	25901-B01-000	CASE B, BEARING	1	
14	96105-06222	BEARING, 62/22UU	1	
15	93100-0801617	BOLT, FLANGE 8×16	4	
16	63909-B96-700	PULLEY, ENGINE	1	
17	91251-0835451	WASHER, RD 8×35×4.5	1	
18	93100-0802517	BOLT, FLANGE 8×25	1	
19	63100-B96-002	PULLEY COMP, 203.2B	1	
20	97114-035141	KEY, 7×7×35SR	1	
21	91251-0835321	WASHER, RD 8×35×3.2	1	
22	93100-0802517	BOLT, FLANGE 8×25	1	
23	63903-B96-000	BELT W800, SB37	1	

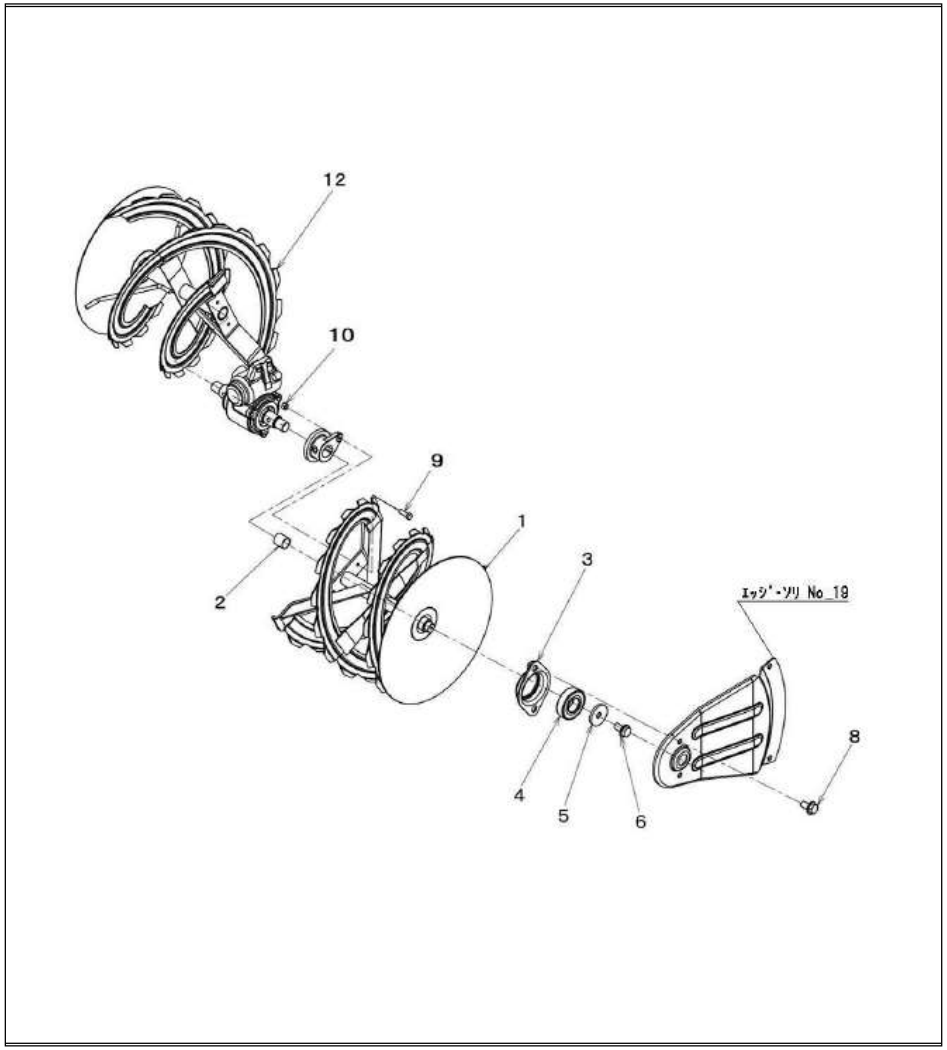

WADO CO., LTD
34.AUGER SXC1070HE

No.	Parts No.	Name	Quantity	Note
1	35100-B96-603	AUGER L COMP	1	
2	91646-2225R	BUSH, BM2225FS	2	
3	35400-B01-001	CASE A COMP, BEARING	2	
4	96105-06004	BEARING, 6004UU	2	
5	91251-0830321	WASHER, RD 8×30×3.2	2	
6	93100-0801617	BOLT, FLANGE 8×16	2	
8	93100-0801617	BOLT, FLANGE 8×16	4	
9	92000-0602517	BOLT 6×25	2	
10	91234-064110	NUT, TOUGH LOCK 6	2	
12	35200-B96-603	AUGER R COMP	1	

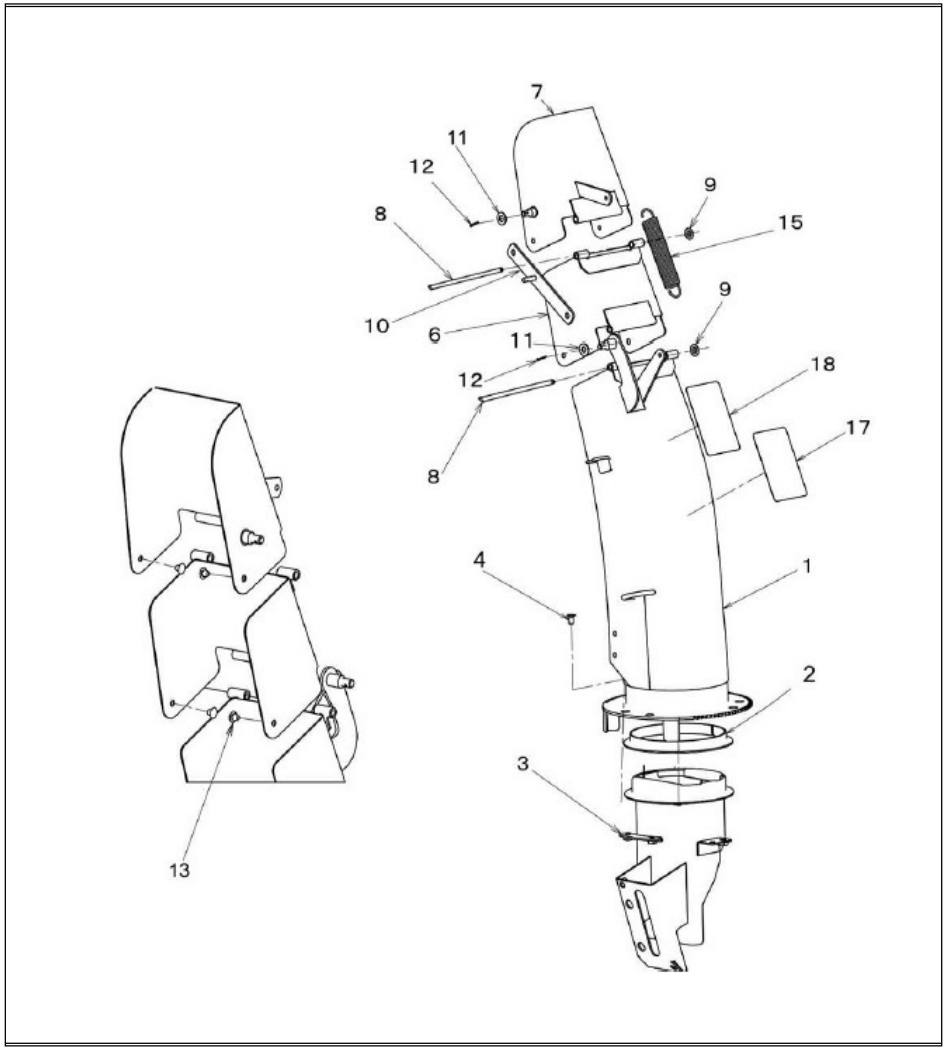

WADO CO., LTD
35.CHUTE SXC1070HE

No.	Parts No.	Name	Quantity	Note
1	33100-B96-004	CHUTE COMP	1	
2	33903-B96-002	SHEET, CHUTE	1	
3	33600-B96-001	CLAMP COMP, CHUTE	3	
4	91217-0601274	SCREW 6×12	6	
6	33200-B96-803	DEFLECTOR A COMP, CHUTE	1	
7	33300-B96-803	DEFLECTOR B COMP, CHUTE	1	
8	33906-B96-000	PIN, CHUTE	2	
9	91243-06000	NUT, PUSH 6	2	
10	37200-B96-830	LINK COMP, CHUTE	1	
11	94101-08010	WASHER, PLAIN 8	2	
12	94210-20120	PIN, SPLIT 2×12	2	
13	91361-0403	PLUG, HOLE 0403	4	
15	33904-B01-104	SPRING, COIL 19.7×127	1	
17	91194-017	LABEL, DISCHARGE WARNING	1	
18	91194-018	LABEL, BLOWER WARNING	1	

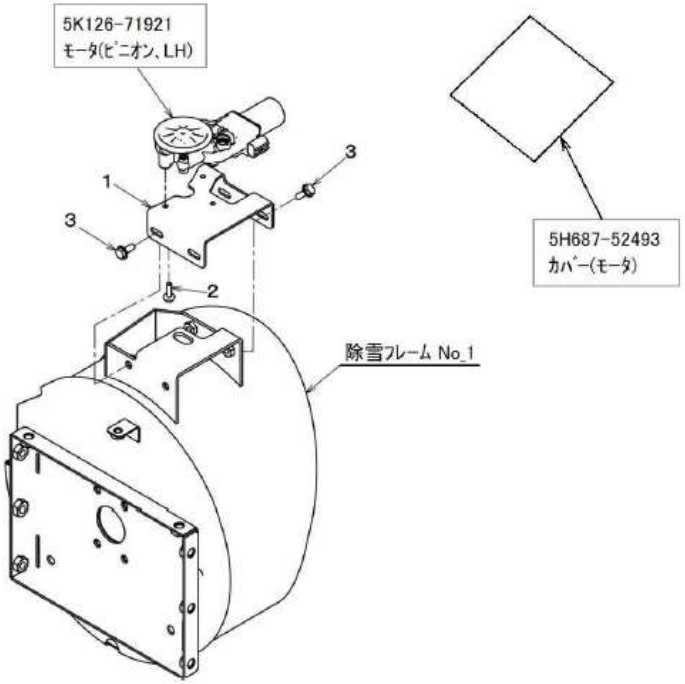

WADO CO., LTD
36.MOTOR (1)
SXC1070HE

No.	Parts No.	Name	Quantity	Note
1	31901-B96-801	BRACKET COMP,MOTOR	1	
2	91274-0501612	BOLT, SPECIAL 5×16	3	
3	93100-0601217	BOLT, FLANGE 6×12	4	
4	-	#N/A		
5	-	#N/A		

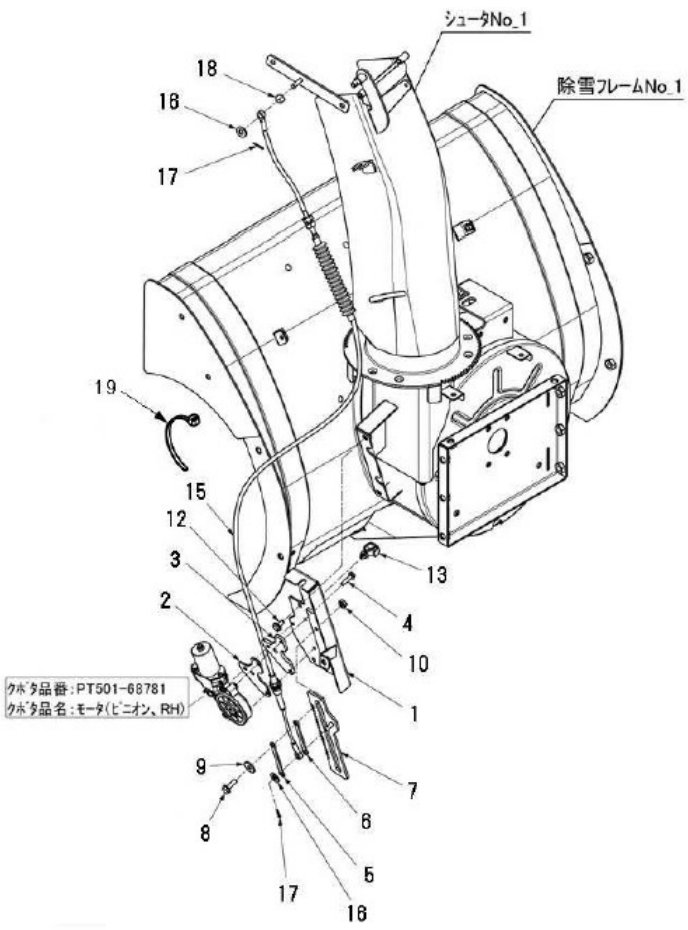

WADO CO., LTD
37.MOTOR (2)
SXC1070HE

No.	Parts No.	Name	Quantity	Note
1	33400-B96-831	BRACKET A COMP, MOTOR	1	
2	33909-B96-802	SPACER B	1	
3	33908-B96-802	SPACER A	1	
4	91274-0501612	BOLT, SPECIAL 5×16	3	
5	31907-B96-801	PLATE A, STOPPER	1	
6	31908-B96-802	PLATE B, STOPPER	1	
7	33500-B96-830	RACK COMP, CHUTE	1	
8	93100-0602017	BOLT, FLANGE 6×20	2	
9	94101-06015	WASHER, PLAIN 6	2	
10	94002-06410	NUT, FLANGE 6	2	
11	-	#N/A		
12	93100-0601617	BOLT, FLANGE 6×16	2	
13	91315-C4397	CLIP, CABLE C-4397	1	
15	77400-B96-000	CABLE, CHUTE	1	
16	94101-06010	WASHER, PLAIN 6	2	
17	94210-20120	PIN, SPLIT 2×12	2	
18	96901-BA1-000	COLLAR, 6×4.5	1	
19	91310-150	BAND, PRT1.5S	1	

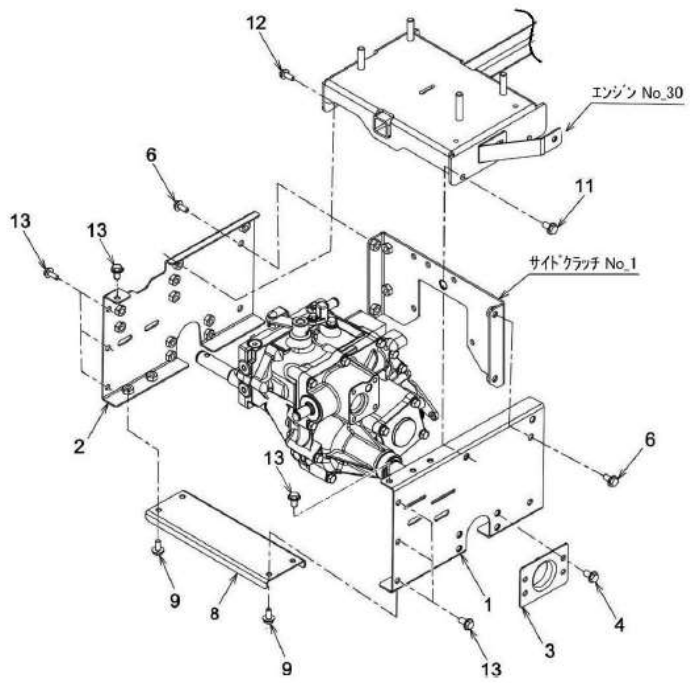

WADO CO., LTD
40.MAIN FRAME SXC1070HE

No.	Parts No.	Name	Quantity	Note
1	41100-B96-830	FRAME L COMP, MAIN	1	
2	41200-B96-830	FRAME R COMP, MAIN	1	
3	21901-B96-800	GUIDE, TRANSMISSION	2	
4	93100-0801617	BOLT, FLANGE 8×16	8	
6	93100-0801617	BOLT, FLANGE 8×16	4	
8	41901-B96-800	PLATE, LOWER	1	
9	93100-0801617	BOLT, FLANGE 8×16	4	
11	93100-0802017	BOLT, FLANGE 8×20	2	
12	93100-0802017	BOLT, FLANGE 8×20	2	
13	93100-0801617	BOLT, FLANGE 8×16	8	

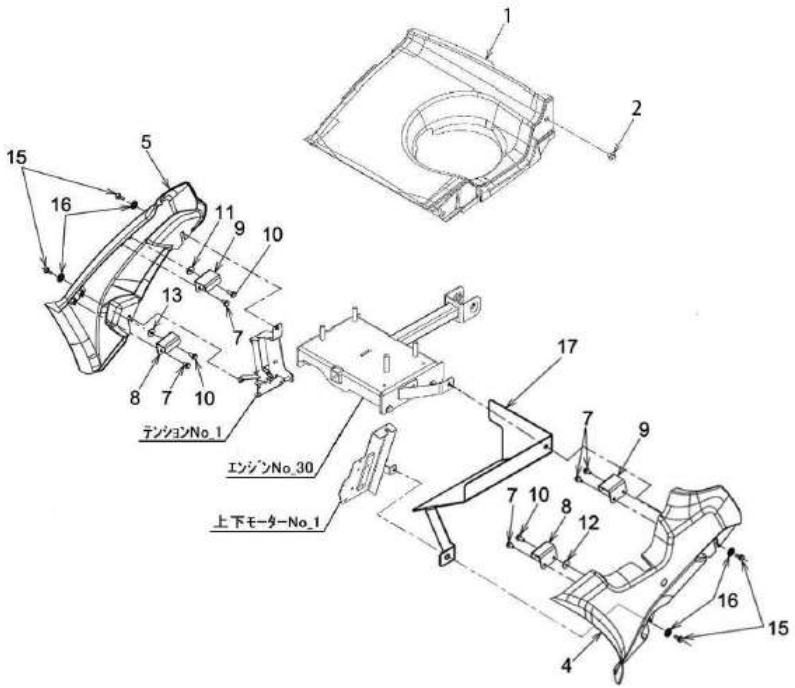

WADO CO., LTD
41.COVER SXC1070HE

No.	Parts No.	Name	Quantity	Note
1	48903-B96-031	COVER CH, BODY	1	
2	48905-B96-000	BOLT, SPECIAL 6×9	4	
4	48500-B96-003	COVER L, FRAME	1	
5	48600-B96-002	COVER R, BODY	1	
7	93100-0601217	BOLT, FLANGE 6×12	5	
8	48904-B96-801	FRONT HOOK, COVER	2	
9	48906-B96-801	REAR HOOK, COVER	2	
10	93100-0601617	BOLT, FLANGE 6×16	3	
11	94101-06015	WASHER, PLAIN 6	1	
12	91251-0620321	WASHER, RD6×20×3.2	1	
13	48914-B96-000	WASHER 6×20×6	1	
14	-	#N/A		
15	93100-0601617	BOLT, FLANGE 6×16	4	
16	94101-06015	WASHER, PLAIN 6	4	
17	04700-B96-800	COVER COMP, SIDE	1	

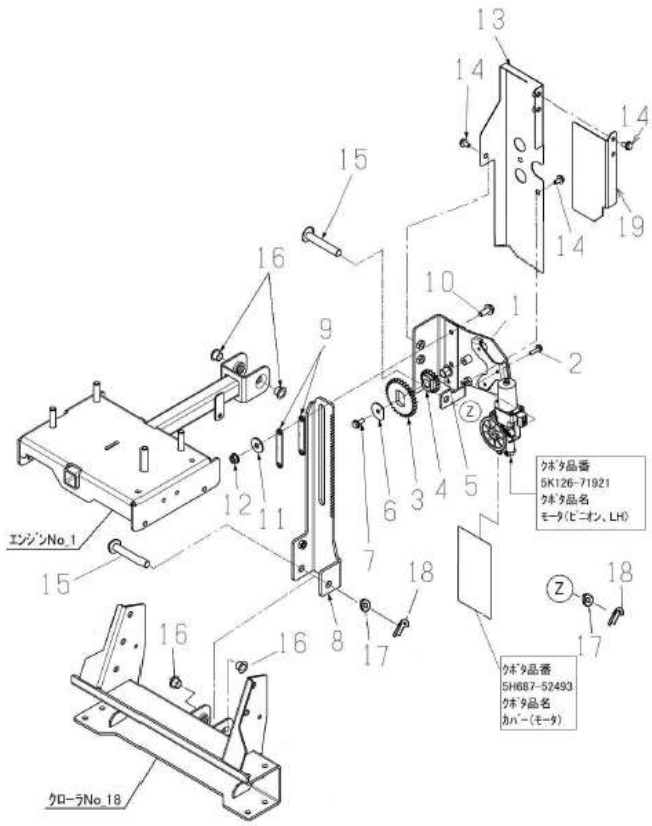

WADO CO., LTD
60.LIFTING SXC1070HE

No.	Parts No.	Name	Quantity	Note
1	72200-B96-801	BRACKET B (E COMP, MOTOR	1	
3	91274-0501612	BOLT, SPECIAL 5×16	3	
4	33902-B56-002	GEAR, M2×32	1	
5	33903-B56-003	GEAR, M2×18	1	
6	91644-121080	BUSH, 80F-1210	4	
7	71903-B96-002	WASHER, SPECIAL 6.5×30	1	
8	93100-0601617	BOLT, FLANGE 6×16	1	
9	91644-121080	BUSH, 80F-1210	1	
10	71400-B96-850	RACK COMP, HEIGHT	1	
11	71904-B96-830	PLATE, STOPPER	2	
12	93100-0802017	BOLT, FLANGE 8×20	2	
13	94101-08015	WASHER, PLAIN 8	2	
14	94002-08410	NUT, FLANGE 8	2	
16	72300-B96-801	COVER A (E COMP, MOTOR	1	
17	93100-0601217	BOLT, FLANGE 6×12	4	
18	72903-B96-801	COVER B (E, MOTOR	1	
20	94330-1208010	PIN, 12×80	2	
21	94101-12010	WASHER, PLAIN 12	2	
22	94210-30250	PIN, SPLIT 3×25	2	

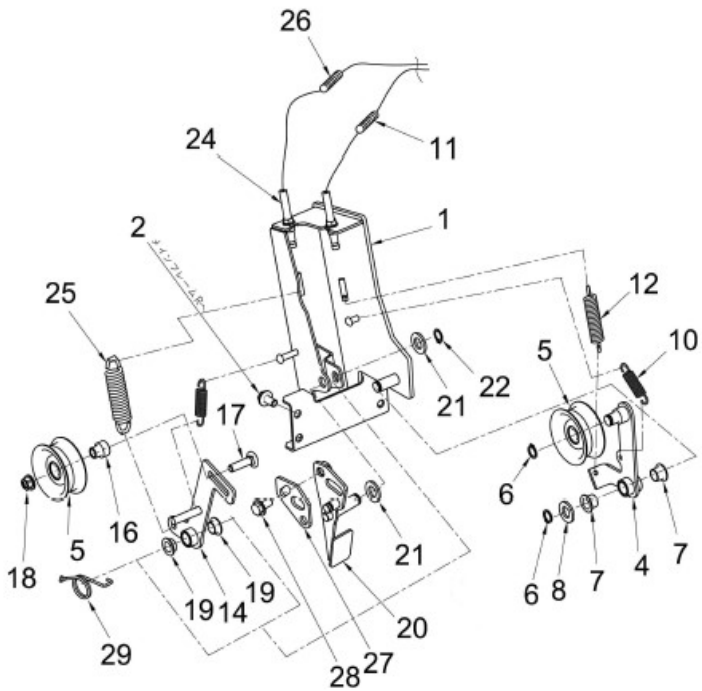

WADO CO., LTD
61.TENSION SXC1070HE

No.	Parts No.	Name	Quantity	Note
10	91603-B50-001	SPRING, COIL 10×50	2	
11	77700-BA1-000	CABLE, TRAVEL CLUTCH (E	1	
12	71906-B96-000	SPRING, TRAVEL TENSION	1	
14	66300-B96-800	ARM COMP, AUGER CLUTCH (1070	1	
16	66902-B96-002	COLLAR, TENSION	1	
17	92600-0803514	BOLT, SPECIAL8×35	1	
18	94002-08410	NUT, FLANGE 8	1	
19	91642-1210R	BUSH, BM1210F20FS	2	
20	66400-B96-800	BRAKE COMP, BLOWER (1070	1	
21	94101-12010	WASHER, PLAIN 12	2	
22	94510-12080	CIRCLIP, EX 12	1	
24	77800-BA1-000	CABLE, AUGER CLUTCH (E	1	
25	71907-B96-000	SPRING, AUGER TENSION	1	
26	91382-0703001	TUBE, CORRUGATE 7×300	2	
27	66906-B96-800	ADJUSTER, BRAKE	1	
28	93100-0801617	BOLT, FLANGE 8×16	1	
29	91601-B96-000	SPRING, RETUEN 2.3	1	

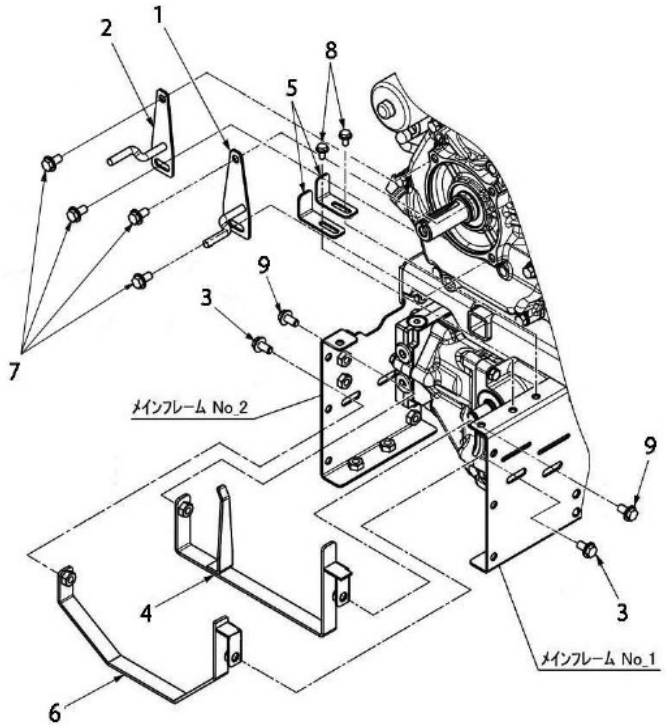

WADO CO., LTD
62.POWER TRANSMISSION SXC1070HE

No.	Parts No.	Name	Quantity	Note
1	63400-B96-850	STOPPER AL COMP, BELT	1	
2	63600-B96-800	STOPPER AR COMP, BELT (1070	1	
3	93100-0801617	BOLT, FLANGE 8×16	2	
4	65400-B96-830	STOPPER D COMP, BELT	1	
5	65903-B96-803	STOPPER C, BELT	2	
7	93100-0801617	BOLT, FLANGE 8×16	4	
8	93100-0601217	BOLT, FLANGE 6×12	2	
9	93100-0801617	BOLT, FLANGE 8×16	2	

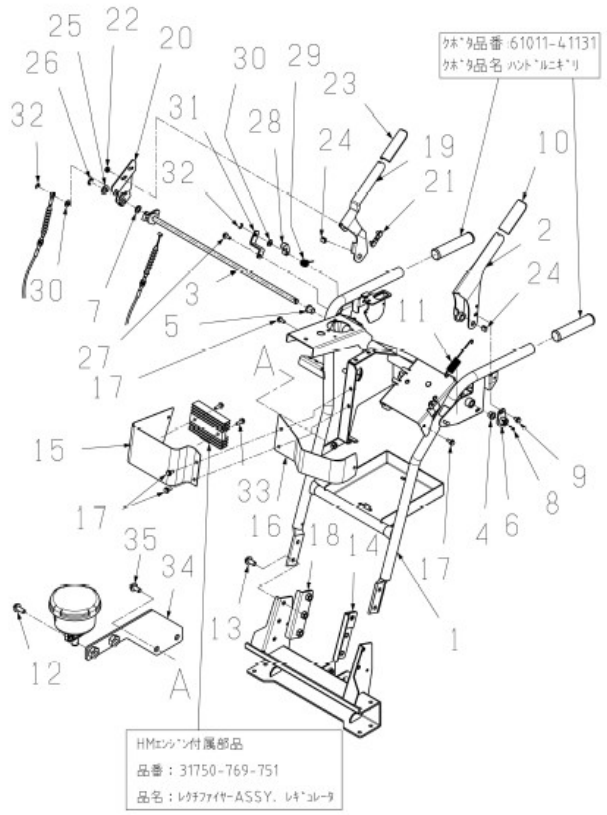

WADO CO., LTD
70.HANDLE SXC1070HE

No.	Parts No.	Name	Quantity	Note
1	71100-BA2-603	HANDLEBAR (1070 COMP	1	
2	73500-B96-634	LEVER COMP, TRAVEL CLUTCH	1	
3	76400-B96-806	SHAFT COMP	1	
4	91644-121080	BUSH, 80F-1210	1	
5	91644-121580	BUSH, 80F-1215	1	
6	74100-B96-634	BOSS COMP, JOINT	1	
7	73903-B96-000	SHIM 12×20×1.2	1	
8	94319-40020	PIN, SPG 4×20	1	
9	93100-0601217	BOLT, FLANGE 6×12	1	
10	73901-B96-001	COVER, DIPPING	1	
11	71905-B96-101	SPRING, CLUTCH LEVER	1	
12	93100-0802017	BOLT, FLANGE 8×20	2	
13	93300-1002017	BOLT, FLANGE 10×1.25×20	6	
14	72400-B96-800	LINK L COMP, HANDLEBAR	1	
15	78300-B96-803	COVER A COMP, FRONT	1	
16	78908-B96-832	COVER B, FRONT	1	
17	93100-0601257	BOLT, FLANGE 6×12	4	
18	72500-B96-800	LINK R COMP, HANDLEBAR	1	
19	73700-B96-800	LEVER COMP, AUGER CLUTCH	1	
20	73400-B96-832	BRACKET COMP, AUGER CLUTCH	1	
21	76500-B96-801	PLATE COMP, SET	1	
22	94002-06410	NUT, FLANGE 6	2	
23	73901-B96-001	COVER, DIPPING	1	
24	71909-B96-000	PROTECTOR, RUBBER 12×10	2	
25	94101-12010	WASHER, PLAIN 12	1	
26	94511-09010	RING, E 9	1	
27	93100-0601617	BOLT, FLANGE 6×16	1	
28	73905-BA2-000	CAM	1	
29	71901-B96-001	SPRING	1	
30	94101-08010	WASHER, PLAIN 8	2	
31	78903-B96-801	BRACKET, REINFORCING	1	
32	94511-07010	RING, E 7	2	
33	93100-0602017	BOLT, FLANGE 6×20	2	
34	71800-B96-800	BRACKET COMP, SUB TANK	1	
35	93100-0801617	BOLT, FLANGE 8×16	2	

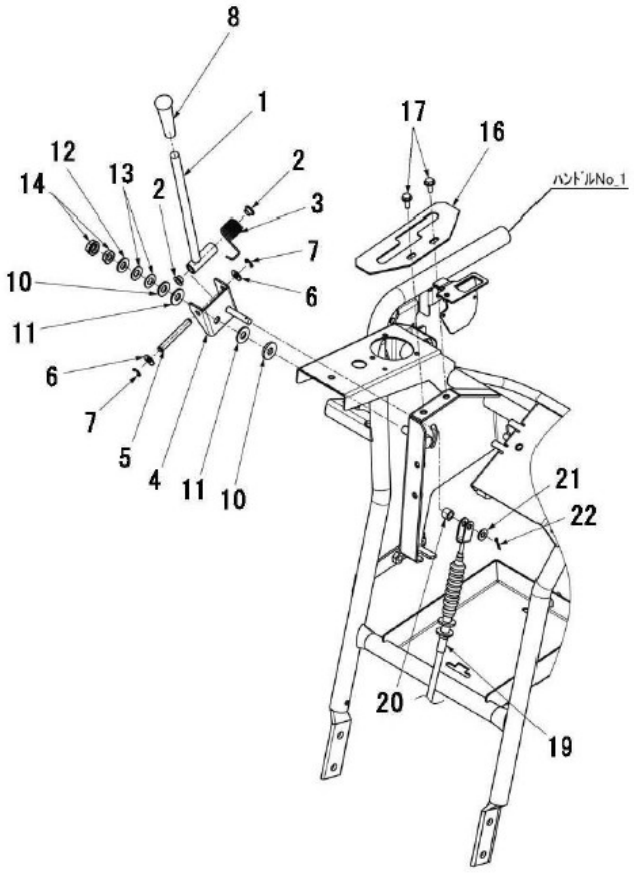

WADO CO., LTD
71.CHANGE LEVER SXC1070HE

No.	Parts No.	Name	Quantity	Note
1	75200-B96-802	GEAR SHIFT COMP	1	
2	91644-081580	BUSH, 80F-0815	2	
3	75904-B96-000	SPRING	1	
4	75100-B96-802	BRACKET COMP, GEAR SHIFT	1	
5	75901-B96-001	SHAFT,GEAR SHIFT	1	
6	94101-08010	WASHER, PLAIN 8	2	
7	94511-07010	RING, E 7	2	
8	91731-1208014	GRIP, LEVER OH12	1	
10	91251-1025321	WASHER, RD 10×25×3.2	2	
11	91648-8010	WASHER, 80W-10	2	
12	94101-10010	WASHER, PLAIN 10	1	
13	91252-102	WASHER, SPG H10	2	
14	91235-10100	NUT, HARD LOCK 10	1	
16	75903-B96-831	PLATE, GUIDE	1	
17	93100-0601617	BOLT, FLANGE 6×16	2	
19	78700-B96-000	CABLE, MAIN GEAR SHIFT	1	
20	08901-G01-000	COLLAR, 8×13.8×10	1	
21	94101-08010	WASHER, PLAIN 8	1	
22	94210-25150	PIN, SPLIT 2.5×15	1	

WADO CO., LTD

72.SIDE CLUTCH LEVER

SXC1070HE

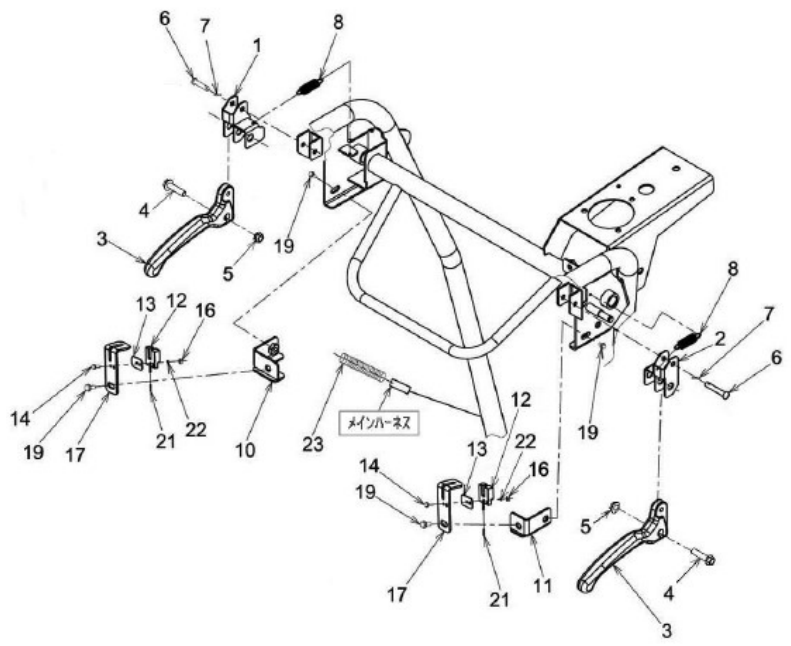

WADO CO., LTD

72.SIDE CLUTCH LEVER

SXC1070HE

No.	Parts No.	Name	Quantity	Note
1	74600-B96-802	BRACKET L COMP, LEVER	1	
2	74700-B96-802	BRACKET R COMP, LEVER	1	
3	74904-B96-001	LEVER, GRIP	2	
4	93300-1004017	BOLT, FLANGE 10×1.25×40	2	
5	91237-1011	NUT, SPECIAL 10×1.25	2	
6	94330-0603510	PIN, 6×35	2	
7	94210-20120	PIN, SPLIT 2×12	2	
8	91606-B96-000	SPRING, COIL 8.8×40	2	
10	74200-B96-830	BRACKET L COMP, SWITCH	1	
11	74300-B96-831	BRACKET R COMP, SWITCH	1	
12	83300-B56-030	SWITCH, REED	2	
13	73908-B56-000	BASE, SWITCH 1.2	2	
14	93500-0301614	SCREW, PAN 3×16	4	
16	94001-03412	NUT, 3	4	
17	78909-B96-801	BASE, SWITCH	2	
19	93100-0601217	BOLT, FLANGE 6×12	4	
21	91382-0501201	TUBE, CORRUGATE 5×120	2	
22	94111-03012	WASHER, SPG 3	4	
23	91382-0700801	TUBE, CORRUGATE 7×80	1	

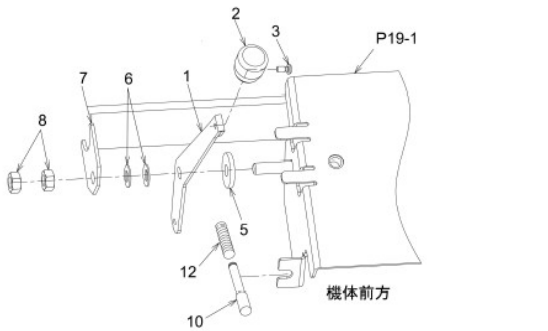

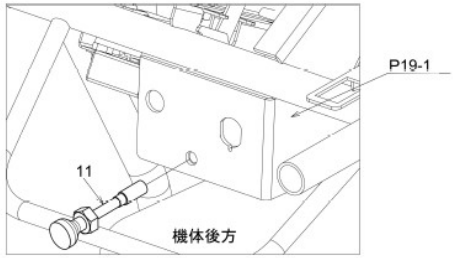

WADO CO., LTD
73.CHOKE, THROTTLE SXC1070HE

No.	Parts No.	Name	Quantity	Note
1	75902-B96-800	LEVER, THROTTLE	1	
2	75907-B18-000	KNOB, THROTTLE LEVER	1	
3	75908-B18-001	SCREW, SPECIAL 4×8	1	
7	77901-BA2-801	PLATE, THRUST	1	
5	91251-0825321	WASHER, RD 8×25×3.2	1	
6	91252-082	SPRING H, PLATE 8	2	
8	94001-08412	NUT, 8	2	
10	77800-B96-030	CABLE, THROTTLE	1	
11	78600-B96-001	CABLE, CHOKE	1	
12	91382-0504701	TUBE, CORRUGATE 5×470	1	

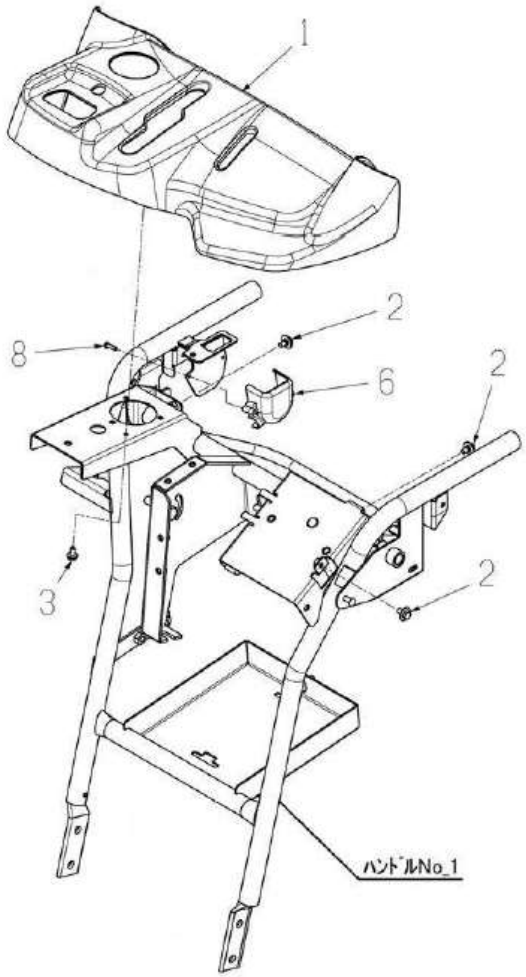

WADO CO., LTD
74.CONTROL PANEL SXC1070HE

No.	Parts No.	Name	Quantity	Note
1	78800-B96-000	PANEL, CONTROL	1	
2	48905-B96-000	BOLT, SPECIAL 6×9	3	
3	93100-0501217	BOLT, FLANGE 5×12	1	
6	78904-BA2-002	COVER, SEESAW SWITCH	1	
7	91314-119P7	STRAP, CABLE 1-19P7	2	
8	93901-M92-000	SCREW 4×12	2	
17	-	#N/A		

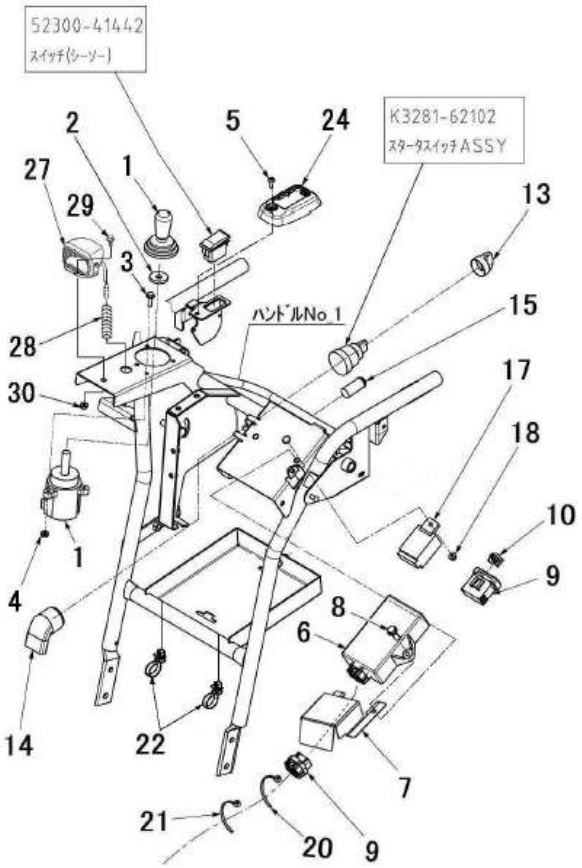

WADO CO., LTD
80.ELECTRICAL PARTS SXC1070HE

No.	Parts No.	Name	Quantity	Note
1	83200-B18-000	SWITCH, CONTROL	1	
2	83902-B18-000	WASHER, RD 11×32×4.5	1	
3	93100-0602017	BOLT, FLANGE 6×20	3	
4	94002-06410	NUT, FLANGE 6	3	
5	93500-0501257	SCREW, PAN 5×12	1	
6	84100-B96-032	CONTROL UNIT, ELECTRONIC	1	
7	71908-B96-801	COVER, ECU	1	
8	93100-0802517	BOLT, FLANGE 8×25	2	
9	85300-B96-003	WIRE HARNESS, MAIN (E	1	
10	81902-BA2-000	CLIP, COUPLER HOLDER	1	
11	-	#N/A		
12	-	#N/A		
13	88901-B82-000	COVER, KEY	1	
14	88902-B81-030	COVER, KEY SWITCH	1	
15	89100-A62-000	LAMP UNIT, PILOT	1	
16	-	#N/A		
17	84200-B88-000	RELAY, CHUTE	1	
18	94002-06410	NUT, FLANGE 6	1	
20	91310-150	BAND, PRT1.5S	9	
21	91310-300	BAND, PRT3S	10	
24	78904-B96-000	COVER, LIFTING SWITCH	1	
26	-	#N/A		
27	83100-G18-000	LAMP, 18W	1	
28	91382-0700801	TUBE, CORRUGATE 7×80	1	
29	93100-0801617	BOLT, FLANGE 8×16	1	
30	94002-08410	NUT, FLANGE 8	1	

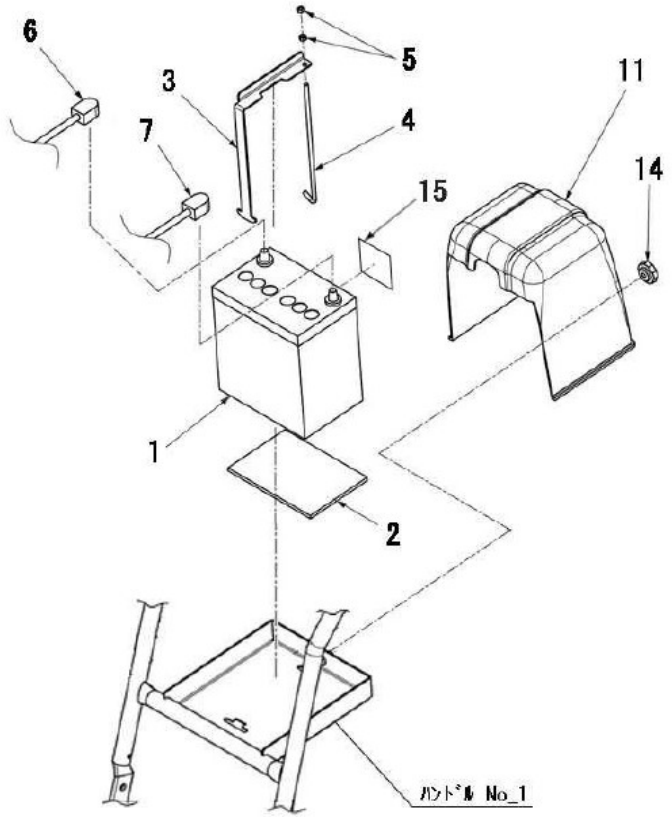

WADO CO., LTD
81.BATTERY SXC1070HE

No.	Parts No.	Name	Quantity	Note
1	91890-040B19L	BATTERY 40B19L	1	
2	89902-M56-002	RUBBER, ANTIVIBRATION	1	
3	86901-BA2-800	CLAMP, BATTERY	1	
4	86902-B96-000	BOLT, BATTERY SET	1	
5	94001-06412	NUT, 6	2	
6	87100-BA2-000	CORD (+), BATTERY 1100	1	
7	87200-B96-030	CORD (-), BATTERY 900	1	
11	88906-B96-031	COVER, BATTERY	1	
14	91242-0821	NUT, KNOB 8	1	
15	91193-018	LABEL, BATTERY DANGER	1	

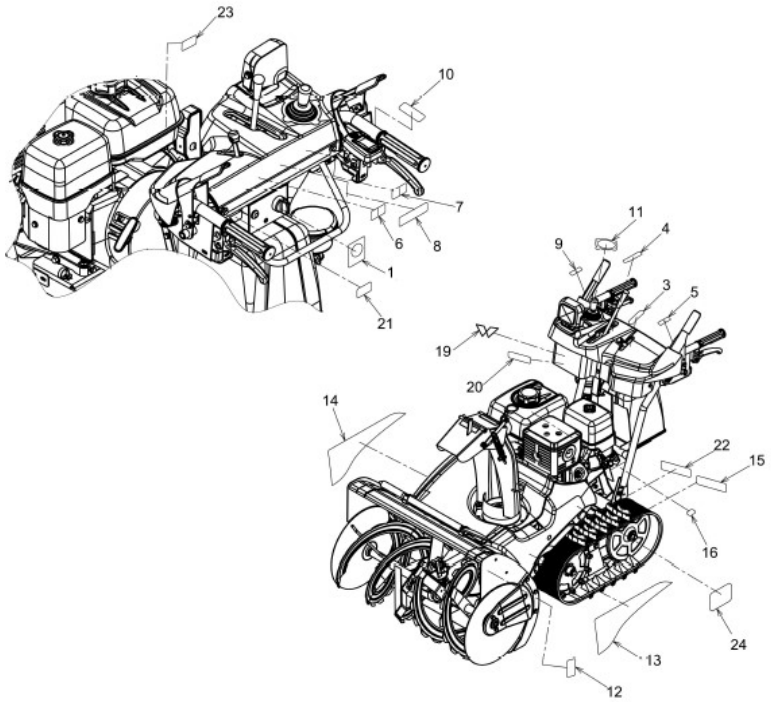

WADO CO., LTD
90.LABEL SXC1070HE

No.	Parts No.	Name	Quantity	Note
1	79902-BA1-000	LABEL, ENGINE SWITCH (E	1	
3	79903-B96-002	MARK, THROTTLE	1	
4	79904-B96-003	MARK, GEAR SHIFT	1	
5	79933-B96-000	MARK, TRAVEL CLUTCH	1	
6	79934-B96-000	MARK L, SIDE CLUTCH	1	
7	79935-B96-000	MARK R, SIDE CLUTCH	1	
8	79946-B96-000	LABEL, WARNING	1	
9	79928-B96-000	LABEL, AUGER CLUTCH LEVER	1	
10	79937-B96-000	MARK, AUGER HEIGHT	1	
11	79910-B96-004	MARK, CHUTE	1	
12	79941-B96-000	LABEL, BELT COVER CAUTION	2	
13	79911-B96-003	MARK L, SXC1070	1	
14	79912-B96-003	MARK R, SXC1070	1	
15	79939-B96-001	MARK, CE	1	
16	79928-B56-000	LABEL, MUFLLER CAUTION	1	
19	79912-B97-001	MARK, WADO	1	
20	79904-B89-000	LABEL, WADO 78	1	
21	79938-B96-000	MARK, FUSE	1	
22	91907-001	-	1	
23	79940-B96-001	MARK, NOISE	1	
24	79910-BA3-002	LABEL, WADO PbH	2	

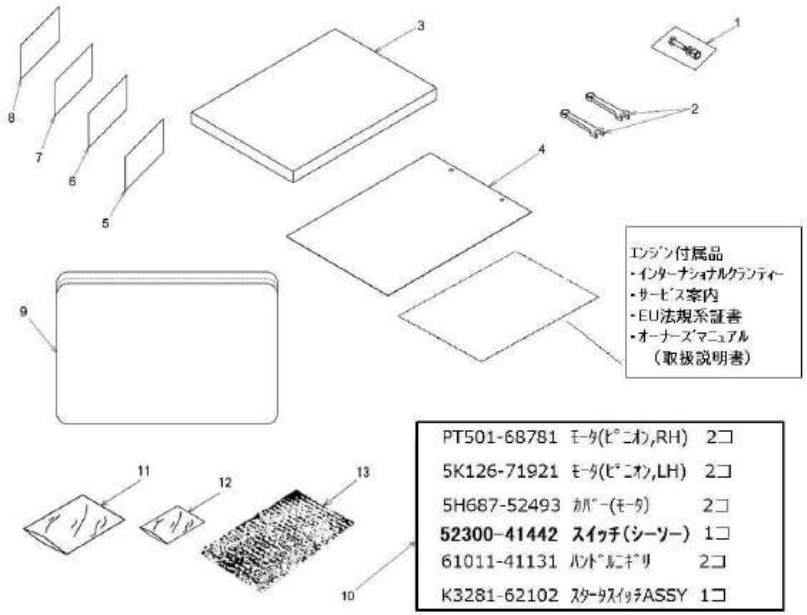

WADO CO., LTD
91.ACCESSORIES SXC1070HE

No.	Parts No.	Name	Quantity	Note
1	90001-B96-004	BOLT ASSY, SHEAR 6×25	1	
2	91905-B56-000	WRENCH 10, COMBINATION	2	
3	91906-B96-090	INSTRUCTION MANUAL	1	
4	91903-001	CERTIFICATE, INSPECTION PASS	1	
5	91811-105	FUSE, BLADE 5A	1	
6	91811-110	FUSE, BLADE 10A	1	
7	91811-125	FUSE, BLADE 25A	1	
8	91811-130	FUSE, BLADE 30A	1	
9	90002-B96-000	CASE, TOOL	1	
10	L6161-0U000	PARTS KIT, SXC1070	1	
11	91998-031215	BAG, POLY 0.03×120×150	1	
12	91998-030812	BAG, POLY 0.03×80×120	1	
13	91997-240325	-	2	